SITE PLAN APPROVAL DRAWINGS
FRENCH-AMERICAN SCHOOL OF NEW YORK
TAX MAP SECTION 131.14 - BLOCK 9 - LOT 3
336 RIDGEWAY
CITY OF WHITE PLAINS, NEW YORK

APPLICANT/OWNER:
FRENCH-AMERICAN SCHOOL OF NEW YORK
525 FENIMORE ROAD
MAMARONECK, NY 10543
TEL: *(914) 250-0400*

ATTORNEY:
ZARIN & STEINMETZ
81 MAIN STREET, SUITE 415
WHITE PLAINS, NY 10601
TEL: *(914) 682-7800*

ARCHITECT & LANDSCAPE ARCHITECT:
STANTEC
400 MORGAN CENTER
101 EAST DIAMOND STREET
BUTLER, PA 16001-5923
TEL: (412) 394-7000

SURVEYOR & CIVIL ENGINEER:
JMC JOHN MEYER CONSULTING
JOHN MEYER CONSULTING
120 BEDFORD ROAD
ARMONK, NEW YORK 10504
(914) 273-5225

PLANNER, TRAFFIC ENGINEER & ENVIRONMENTAL CONSULTANT:
AKRF, INC.
34 SOUTH BROADWAY, SUITE 401
WHITE PLAINS, NY 10601
TEL: *(914) 949-7336*

CONSTRUCTION MANAGER:
TURNER CONSTRUCTION COMPANY
50 WATERVIEW DRIVE
SHELTON, CT 06484
TEL: *(203) 712-6070*

GEOTECHNICAL ENGINEER:
CARLIN-SIMPSON & ASSOCIATES
61-67 MAIN STREET
SAYREVILLE, NJ 08872
TEL: *(732) 432-5757*

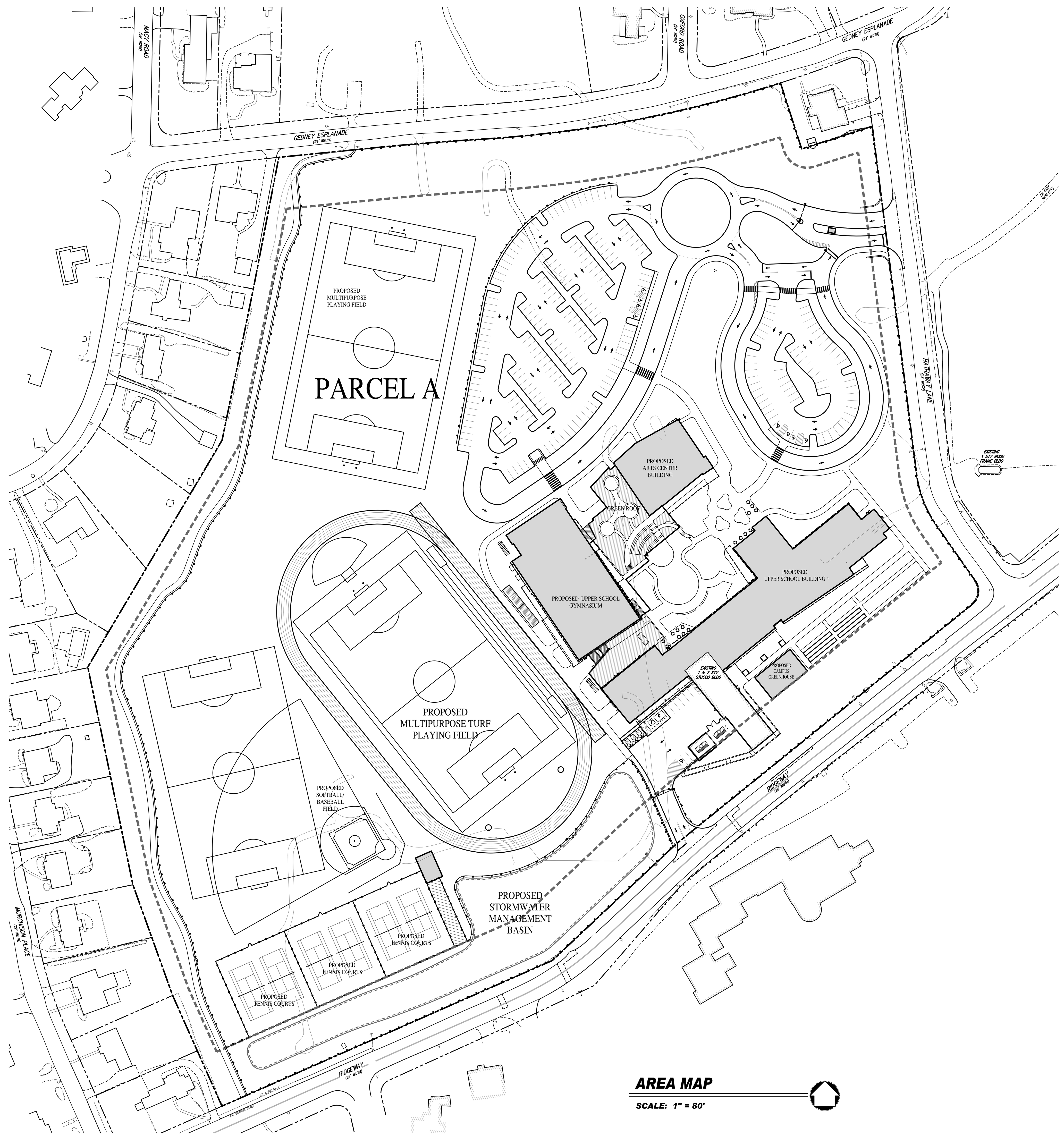

AREA MAP
SCALE: 1" = 80'

JMC DRAWINGS:

SP-1	COVER SHEET
SP-2	SITE EXISTING CONDITIONS PLAN
SP-3	SITE DEMOLITION PLAN
SP-4	SITE LAYOUT PLAN
SP-5	SITE GRADING PLAN
SP-6	SITE UTILITIES PLAN
SP-7	SITE SEDIMENT & EROSION CONTROL PLAN
SP-8	SANITARY SEWER AND WATER MAIN PROFILES
SP-9	STORM SEWER PROFILES
SP-10	FIRE ACCESS / GARBAGE TRUCK PLAN
SP-11	ROAD PROFILES
SP-12	CONSTRUCTION DETAILS
SP-13	CONSTRUCTION DETAILS
SP-14	CONSTRUCTION DETAILS
SP-15	CONSTRUCTION DETAILS
SP-16	CONSTRUCTION DETAILS
SP-17	CONSTRUCTION DETAILS
SP-18	CONSTRUCTION DETAILS
SP-19	SANITARY SEWER STANDARD CONSTRUCTION DETAILS
SP-20	SITE LIGHTING PLAN

STANTEC DRAWINGS:

L101	LANDSCAPE PLAN, TREES AND SHRUBS
L102	LANDSCAPE PLAN, GROUND PLANE

ZONING COMPLIANCE CHART

DESCRIPTION	R1-30 (RESIDENTIAL ONE FAMILY) DISTRICT REQUIREMENTS	EXISTING	PROPOSED (SITE PLAN/ SPECIAL PERMIT)
MINIMUM LOT AREA (SF)			
PARCEL A (1)	30,000	1,208,782	1,208,782
FLOOR AREA RATIO (FAR)	0.40	0.01	0.12
MINIMUM FRONTAGE (FEET)			
PARCEL A (1)	150	>150	>150
MINIMUM DEPTH (FEET)	150	>150	>150
MAXIMUM COVERAGE ALL BUILDINGS (%)	20	0.64	8.40
MINIMUM PRINCIPAL BUILDING SETBACKS	–	–	–
UPPER SCHOOL/GYMNASIUM/PERFORMING ARTS			
FRONT – EXISTING BUILDING TO REMAIN (FEET)	75	36 (2)	36
FRONT – PROPOSED BUILDING (FEET)	75	N/A	141
ONE SIDE (FEET)	25	N/A	274
TWO SIDES (FEET)	50	–	709
REAR (FEET)	30	N/A	436
CAMPUS GREENHOUSE			
FRONT (FEET)	75	N/A	75
ONE SIDE (FEET)	25	N/A	447
TWO SIDES (FEET)	50	N/A	1388
REAR (FEET)	30	N/A	790
MAXIMUM BUILDING HEIGHT (STORIES/FEET) (3)			
UPPER SCHOOL/GYMNASIUM/PERFORMING ARTS	2.5/35	N/A	38.94 (3)
FLOOR AREA (4)			
EXISTING BUILDING	N/A	53,735	N/A
UPPER SCHOOL/GYMNASIUM	N/A	N/A	120,689
PERFORMING ARTS	N/A	N/A	22,425
CAMPUS GREENHOUSE	N/A	N/A	2,600
ACCESSORY STRUCTURES	N/A	N/A	1,070
TOTAL FLOOR AREA	N/A	57,735	146,784
MINIMUM NUMBER OF OFF-STREET PARKING SPACES			
STANDARD PARKING SPACES (9'X18')		173	239
HANDICAP PARKING SPACES (8'X18')	–	4	9
TOTAL PARKING SPACES	–	177	248

NOTES:

1. THE PARCEL DESIGNATIONS IDENTIFIED ABOVE ARE FOR THE PURPOSE OF IDENTIFYING THE PROPOSED DEVELOPMENT PARCELS AND DO NOT REFLECT THE DEED INFORMATION DEPICTED ON THE BOUNDARY SURVEY.
2. EXISTING NON-CONFORMING.
3. IN ACCORDANCE WITH SECTION 4.4.15 OF THE ZONING CODE, SCHOOLS IN RESIDENTIAL DISTRICTS ARE PERMITTED TO EXCEED THE HEIGHT LIMITATION PROVIDED THAT FOR EVERY ONE FOOT OVER THE MAXIMUM PERMITTED HEIGHT, EACH REQUIRED YARD IS INCREASED BY ONE FOOT.
4. FLOOR AREA DESCRIBED ABOVE IS THE GROSS FLOOR AREA OF ALL BUILDINGS. DEDUCTIONS FOR MECHANICAL SPACES, ATRIUMS, ETC. HAVE NOT BEEN TAKEN.

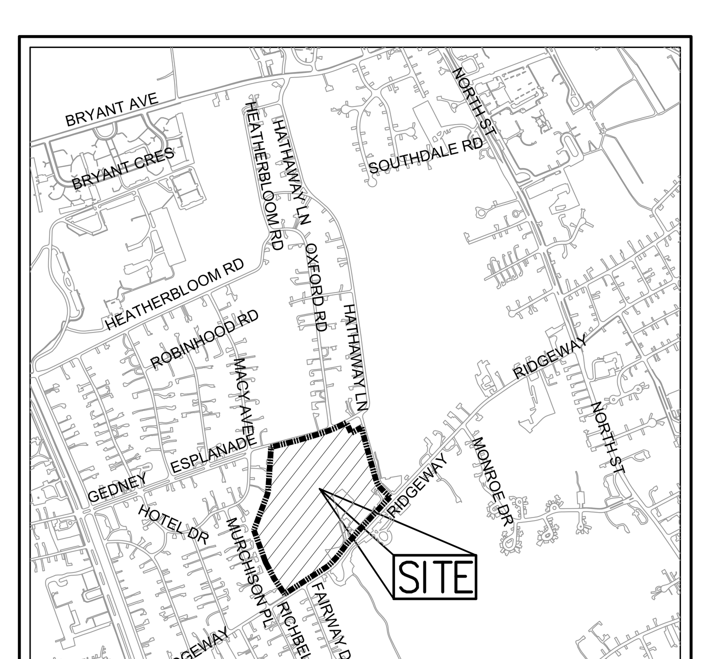

VICINITY MAP
SCALE: 1" = 1000'

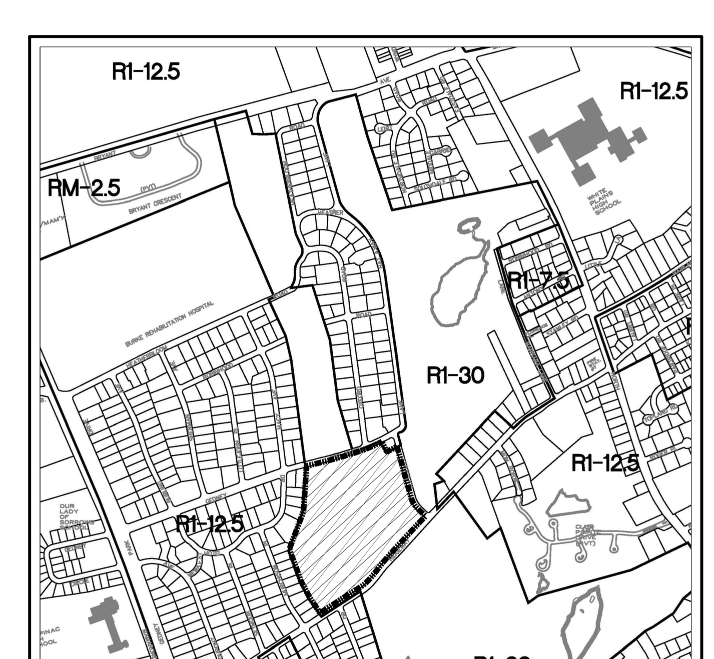

ZONING MAP
SCALE: 1" = 1000'

SUMMARY OF ENVIRONMENTALLY SENSITIVE SITE FEATURES (PARCEL A)	AREA
WETLANDS	0
PONDS	0
WATERCOURSES/INTERMITTENT STREAMS	0
STEEP SLOPES (20% and Greater)	9,877 SF/0.23 AC
ROCK OUTCROPPINGS	0
HIGHLY ERODIBLE SOILS	0
FLOODPLAINS (100 Year Flood Hazard Zone)	0
AQUIFER RECHARGE AREAS	0

NOTES:

A. THE INFORMATION ON THE ERODIBILITY OF EXISTING ON-SITE SOILS WAS TAKEN FROM DATA PROVIDED BY THE UNITED STATES DEPARTMENT OF AGRICULTURE NATURAL RESOURCES CONSERVATION SERVICES (NRCS). A WEB SOIL REPORT WAS ANALYZED FOR THE SITE AND IT WAS CONCLUDED THAT THE PROPERTY DOES NOT CONTAIN SOILS WITH HIGH ERODIBILITY FACTORS.

B. FLOOD PLAIN INFORMATION WAS TAKEN FROM FLOOD INSURANCE RATE MAPS (FIRMS) PROVIDED BY THE FEDERAL EMERGENCY MANAGEMENT AGENCY (FEMA). THE PROPERTY AND ADJOINING PROPERTIES ARE LOCATED WITHIN ZONE X WHICH INDICATES THAT THE PROPERTY IS LOCATED OUTSIDE THE 0.2% ANNUAL CHANGE FLOODPLAIN.

C. THE WESTCHESTER COUNTY DIGITAL BASE MAP, WHICH WAS PREPARED BY THE WESTCHESTER COUNTY DEPARTMENT OF INFORMATION TECHNOLOGY GEOGRAPHIC INFORMATION SYSTEM (GIS) WAS USED TO CONFIRM THE PRESENT/ABSENSE OF THE AQUIFER RECHARGE AREAS.

D. THE ONLY STEEP SLOPES PRESENT ON PARCEL A ARE IN RELATION TO THE EXISTING SAND TRAPS AND TEE BOXES. THE AREA OF STEEP SLOPES ASSOCIATED WITH THE SAND TRAPS IS LESS THAN 10% OF THE AREA OF PARCEL A. THEREFORE, PURSUANT TO SECTION 3-5-3 OF THE MUNICIPAL CODE, THE STEEP SLOPES ARE NOT CONSIDERED AN ENVIRONMENTALLY SENSITIVE FEATURE. ACCORDINGLY, THERE ARE NO ENVIRONMENTALLY SENSITIVE SITE FEATURES ON PARCEL A.

IN ACCORDANCE WITH THE FASNY WETLAND INVESTIGATION REPORT PREPARED BY AKRF, DATED MAY 9, 2012, THERE ARE NO WETLANDS, PONDS OR WATERCOURSES ON PARCEL A. THERE ARE NO ROCK OUTCROPS, HIGHLY ERODIBLE SOILS, FLOODPLAINS OR AQUIFER RECHARGE AREAS PRESENT ON PARCEL A. THE ONLY STEEP SLOPES PRESENT ON PARCEL A ARE IN RELATION TO THE EXISTING SAND TRAPS AND TEE BOXES. THE AREA OF STEEP SLOPES ASSOCIATED WITH THE SAND TRAPS IS LESS THAN 10% OF THE AREA OF PARCEL A. THEREFORE, PURSUANT TO SECTION 3-5-3 OF THE MUNICIPAL CODE, THE STEEP SLOPES ARE NOT CONSIDERED AN ENVIRONMENTALLY SENSITIVE FEATURE. ACCORDINGLY, THERE ARE NO ENVIRONMENTALLY SENSITIVE SITE FEATURES ON PARCEL A.

CERTIFIED BY: Graham Trelstad 10/31/16
GRAHAM TRELSTAD, AICP
AKRF

GENERAL CONSTRUCTION NOTES APPLY TO ALL WORK HEREIN:

A. PRIOR TO CONSTRUCTION, THE CONTRACTOR SHALL CALL 811 "DIG SAFELY" (1-800-962-7962) TO HAVE UNDERGROUND UTILITIES LOCATED. EXPLORATORY EXCAVATIONS SHALL COMPLY WITH CODE 753 REQUIREMENTS. NO WORK SHALL COMMENCE UNTIL ALL THE OPERATORS HAVE NOTIFIED THE CONTRACTOR THAT THEIR UTILITIES HAVE BEEN LOCATED. THE CONTRACTOR SHALL BE RESPONSIBLE FOR THE PRESERVATION OF ALL PUBLIC AND PRIVATE UNDERGROUND AND SURFACE UTILITIES AND STRUCTURES AT OR ADJACENT TO THE SITE OF CONSTRUCTION, INSOFAR AS THEY MAY BE ENDANGERED BY HIS OPERATIONS. THIS SHALL HOLD TRUE WHETHER OR NOT THEY ARE SHOWN ON THE CONTRACT DRAWINGS. IF THEY ARE SHOWN ON THE DRAWINGS, THEIR LOCATIONS ARE NOT GUARANTEED EVEN THOUGH THE INFORMATION WAS OBTAINED FROM THE BEST AVAILABLE SOURCES, AND IN ANY EVENT, OTHER UTILITIES ON THESE PLANS MAY BE ENCOUNTERED IN THE FIELD. THE CONTRACTOR SHALL, AT HIS OWN EXPENSE, IMMEDIATELY REPAIR OR REPLACE ANY STRUCTURES OR UTILITIES THAT HE DAMAGES, AND SHALL CONSTANTLY PROCEED WITH CAUTION TO PREVENT UNDUE INTERRUPTION OF UTILITY SERVICE.

B. UNDER INDUSTRIAL CODE 753, CONTRACTOR SHALL NOTIFY ALL OPERATORS OF UTILITIES LOCATED IN THE AREA WHERE THE WORK IS TO BE PERFORMED PRIOR TO THE START OF THIS WORK SO THAT ALL THE VARIOUS UNDERGROUND UTILITY OPERATORS WILL BE ABLE TO LOCATE AND MARK THE LOCATIONS OF THEIR OWN UTILITIES. NO WORK SHALL COMMENCE UNTIL ALL THE OPERATORS HAVE NOTIFIED THE CONTRACTOR THAT THEIR UTILITIES HAVE BEEN LOCATED.

C. CONTRACTOR SHALL HAND DIG TEST PITS TO VERIFY THE LOCATION OF ALL EXISTING UNDERGROUND UTILITIES PRIOR TO THE START OF CONSTRUCTION. CONTRACTOR SHALL VERIFY EXISTING UTILITIES DEPTHS AND ADVISE OF ANY CONFLICTS WITH PROPOSED UTILITIES. IF CONFLICTS ARE PRESENT. THE OWNER'S FIELD REPRESENTATIVE, JOHN MEYER CONSULTING, PC AND THE APPLICABLE MUNICIPALITY OR AGENCY SHALL BE NOTIFIED IN WRITING. THE EXISTING/PROPOSED UTILITIES RELOCATION SHALL BE DESIGNED BY JOHN MEYER CONSULTING, PC.

D. CONTRACTOR IS RESPONSIBLE FOR OBTAINING ANY AND ALL LOCAL PERMITS REQUIRED.

E. ALL WORK SHALL BE DONE IN STRICT COMPLIANCE WITH ALL APPLICABLE NATIONAL, STATE, AND LOCAL CODES, STANDARDS, ORDINANCES, RULES, AND REGULATIONS. ALL CONSTRUCTION WORK SHALL BE PERFORMED IN ACCORDANCE WITH ALL SAFETY CODES. APPLICABLE SAFETY CODES MEAN THE LATEST EDITION INCLUDING ANY AND ALL AMENDMENTS, REVISIONS, AND ADDITIONS THERETO, TO THE FEDERAL DEPARTMENT OF LABOR, OCCUPATIONAL SAFETY AND HEALTH ADMINISTRATION'S OCCUPATIONAL SAFETY AND HEALTH STANDARDS (OSHA); AND APPLICABLE SAFETY, HEALTH REGULATIONS AND BUILDING CODES FOR CONSTRUCTION IN THE STATE OF NEW YORK. THE CONTRACTOR SHALL BE RESPONSIBLE FOR GUARDING AND PROTECTING ALL OPEN EXCAVATIONS IN ACCORDANCE WITH THE PROVISION OF SECTION 107-05 (SAFETY AND HEALTH REQUIREMENTS) OF THE NYSDOT STANDARD SPECIFICATIONS. IF THE CONTRACTOR PERFORMS ANY HAZARDOUS CONSTRUCTION PRACTICES, ALL OPERATIONS IN THE AFFECTED AREA SHALL BE DISCONTINUED AND IMMEDIATE ACTION SHALL BE TAKEN TO CORRECT THE SITUATION TO THE SATISFACTION OF THE APPROVAL AUTHORITY HAVING JURISDICTION.

F. CONTRACTOR SHALL MAINTAIN ACCESS TO ALL PROPERTIES AFFECTED BY THE SCOPE OF WORK SHOWN HEREON AT ALL TIMES TO THE SATISFACTION OF THE OWNERS REPRESENTATIVE. RAMPING CONSTRUCTION TO PROVIDE ACCESS MAY BE CONSTRUCTED WITH SUBBASE MATERIAL EXCEPT THAT TEMPORARY ASPHALT CONCRETE SHALL BE PLACED AS DIRECTED BY THE ENGINEER. THE CONTRACTOR SHALL BE RESPONSIBLE FOR PROVIDING SAFE PEDESTRIAN ACCESS AT ALL TIMES.

G. CONTRACTOR SHALL MAINTAIN THE INTEGRITY OF EXISTING PAVEMENT TO REMAIN.

ZONING DESIGNATION KEY	
R1-5	RESIDENTIAL ONE FAMILY
R1-7.5	RESIDENTIAL ONE FAMILY
R1-30	RESIDENTIAL ONE FAMILY
RM-2.5	RESIDENTIAL MULTI-FAMILY
RM-2.5	RESIDENTIAL MULTI-FAMILY

COPYRIGHT © 2016 By John Meyer Consulting
All Rights Reserved. No part of this document may be reproduced, stored in a retrieval system, or transmitted in any form or by means, electronic, mechanical, photocopying, recording or otherwise, without the prior written permission of John Meyer Consulting. Any modifications or alterations to this document without the written permission of John Meyer Consulting shall render them invalid and unusable.

NOT FOR CONSTRUCTION

ANY ALTERATION OF PLANS, SPECIFICATIONS, PLATS AND REPORTS BEARING THE SEAL OF A LICENSED PROFESSIONAL ENGINEER OR LICENSED LAND SURVEYOR IS A VIOLATION OF SECTION 7209 OF THE NEW YORK STATE EDUCATION LAW, EXCEPT AS PROVIDED FOR BY SECTION 7209, SUBSECTION 2.

NO.	REVISION	DATE	BY
1.	SITE PLAN SUBMISSION	05/19/2014	CS
2.	REVISED PER CITY COMMENTS	10/20/2014	CS
3.	REVISED PER CITY COMMENTS	12/10/2014	CS
4.	REVISED PER CITY COMMENTS	03/17/2015	CS
5.	REVISED PER CITY COMMENTS	05/01/2015	CS
6.	REVISED PER CITY COMMENTS	05/15/2015	CS
7.	SITE PLAN SUBMISSION	10/31/2016	CS

Previous Editions Obsolete

DRAWN: CS		APPROVED: RR
SCALE: AS SHOWN		
DATE: 05/05/2014		
PROJECT No: 10170		
DWG: 10170-COVER	TAB: COVER	SCR: COVER
DRAWING No: SP–1		

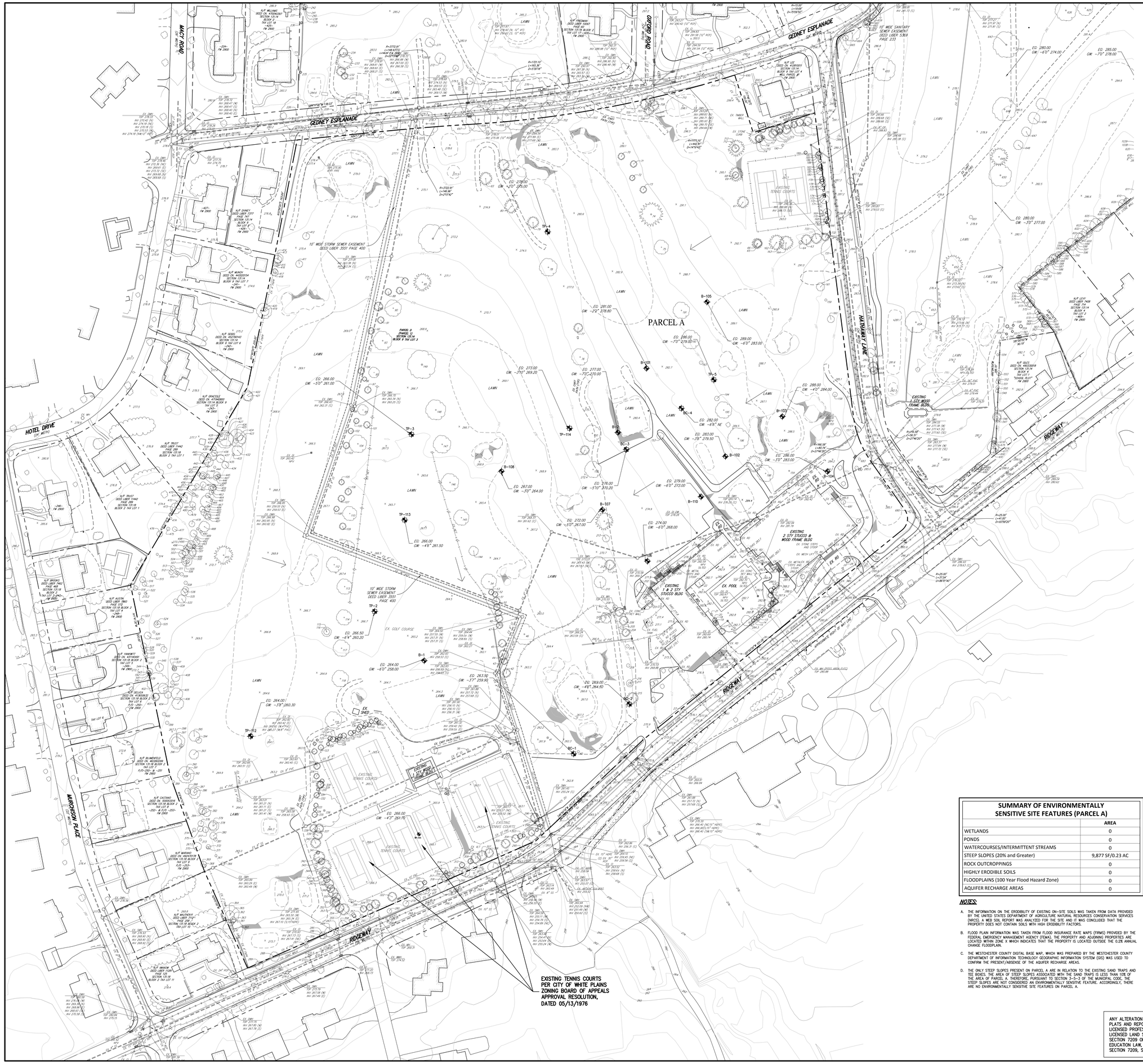

LEGEND

- EXISTING PROPERTY LINE
- ADJACENT PROPERTY LINE
- EXISTING EASEMENT LINE
- EXISTING 100' WETLAND BUFFER
- EXISTING BUILDING OVERHANG
- EXISTING BUILDING LINE
- EXISTING PAVEMENT EDGE
- EXISTING CURB LINE
- EXISTING CART PATH
- LIMIT OF EXISTING FAIRWAY
- EXISTING CONTOUR
- EXISTING INDEX CONTOUR
- EXISTING SPOT GRADE
- EXISTING SWALE LINE
- EXISTING FENCE
- EXISTING TREE AND DESIGNATION
- EXISTING TREE LINE
- EXISTING PAINT
- EXISTING STORM DRAIN LINE AND SIZE
- EXISTING SANITARY LINE AND SIZE
- EXISTING WATER LINE
- EXISTING GAS LINE
- EXISTING ELECTRIC LINE
- EXISTING OVERHEAD WIRES
- EXISTING DRAIN INLET
- EXISTING MANHOLE
- EXISTING FIRE HYDRANT
- EXISTING GAS VALVE
- EXISTING WATER VALVE
- EXISTING UTILITY POLE
- EXISTING SIGN
- 20% AND GREATER SLOPES
- EXISTING DRAINAGE FLOW PATTERN
- B-106 BORING LOCATION AND DESIGNATION

NOTES:

1. EXISTING CONDITIONS DEPICTED ON THIS PLAN HAVE BEEN TAKEN FROM SURVEY TITLED, "TOPOGRAPHIC AND UTILITIES SURVEY," PREPARED BY JOHN MEYER CONSULTING, P.C., LAST UPDATED MARCH 13, 2015.
2. THE PARCEL DESIGNATIONS IDENTIFIED ON THE DRAWINGS ARE FOR THE PURPOSE OF DESCRIBING THE PROPOSED DEVELOPMENT AND DO NOT REFLECT THE DEED INFORMATION DEPICTED ON THE BOUNDARY SURVEY.
3. GEOTECHNICAL BORING/TEST PIT LOCATIONS DEPICTED ON THIS PLAN WERE TAKEN FROM THE GEOTECHNICAL REPORT ENTITLED, "REPORT ON SUBSURFACE SOIL AND FOUNDATION INVESTIGATION", LAST REVISED ON 10/02/2014, PREPARED BY CARLIN-SIMPSON & ASSOCIATES.

SUMMARY OF ENVIRONMENTALLY SENSITIVE SITE FEATURES (PARCEL A)

	AREA
WETLANDS	0
PONDS	0
WATERCOURSES/INTERMITTENT STREAMS	0
STEEP SLOPES (20% and Greater)	9,877 SF/0.23 AC
ROCK OUTCROPPINGS	0
HIGHLY ERODIBLE SOILS	0
FLOODPLAINS (100 Year Flood Hazard Zone)	0
AQUIFER RECHARGE AREAS	0

NOTES:

A. THE INFORMATION ON THE ERODIBILITY OF EXISTING ON-SITE SOILS WAS TAKEN FROM DATA PROVIDED BY THE UNITED STATES DEPARTMENT OF AGRICULTURE NATURAL RESOURCES CONSERVATION SERVICES (NRCS). A WEB SOIL REPORT WAS ANALYZED FOR THE SITE AND IT WAS CONCLUDED THAT THE PROPERTY DOES NOT CONTAIN SOILS WITH HIGH ERODIBILITY FACTORS.

B. FLOOD PLAIN INFORMATION WAS TAKEN FROM FLOOD INSURANCE RATE MAPS (FIRMS) PROVIDED BY THE FEDERAL EMERGENCY MANAGEMENT AGENCY (FEMA). THE PROPERTY AND ADJOINING PROPERTIES ARE LOCATED WITHIN ZONE X WHICH INDICATES THAT THE PROPERTY IS LOCATED OUTSIDE THE 0.2% ANNUAL CHANGE FLOODPLAIN.

C. THE WESTCHESTER COUNTY DIGITAL BASE MAP, WHICH WAS PREPARED BY THE WESTCHESTER COUNTY DEPARTMENT OF INFORMATION TECHNOLOGY GEOGRAPHIC INFORMATION SYSTEM (GIS) WAS USED TO CONFIRM THE PRESENT/ABSENSE OF THE AQUIFER RECHARGE AREAS.

D. THE ONLY STEEP SLOPES PRESENT ON PARCEL A ARE IN RELATION TO THE EXISTING SAND TRAPS AND TEE BOXES. THE AREA OF STEEP SLOPES ASSOCIATED WITH THE SAND TRAPS IS LESS THAN 10% OF THE AREA OF PARCEL A. THEREFORE, PURSUANT TO SECTION 3-5-3 OF THE MUNICIPAL CODE, THE STEEP SLOPES ARE NOT CONSIDERED AN ENVIRONMENTALLY SENSITIVE FEATURE. ACCORDINGLY, THERE ARE NO ENVIRONMENTALLY SENSITIVE SITE FEATURES ON PARCEL A.

ANY ALTERATION OF PLANS, SPECIFICATIONS, PLATS AND REPORTS BEARING THE SEAL OF A LICENSED PROFESSIONAL ENGINEER OR LICENSED LAND SURVEYOR IS A VIOLATION OF SECTION 7209 OF THE NEW YORK STATE EDUCATION LAW, EXCEPT AS PROVIDED FOR BY SECTION 7209, SUBSECTION 2.

COPYRIGHT © 2015 by JMC
All Rights Reserved. No part of this document may be reproduced, stored in a retrieval system, or transmitted in any form or by means, electronic, mechanical, photocopying, recording or otherwise, without the prior written permission of JMC PLANNING, ENGINEERING, LANDSCAPE ARCHITECTURE & LAND SURVEYING, PLLC, JMC SITE DEVELOPMENT CONSULTANTS, LLC, JOHN MEYER CONSULTING, INC. (JMC). Any modifications or alterations to this document without the written permission of JMC shall render them invalid and unusable.

NOT FOR CONSTRUCTION

No.	Revision	Date	By
1.	SITE PLAN SUBMISSION	05/19/2014	CS
2.	REVISED PER CITY COMMENTS	10/20/2014	CS
3.	REVISED PER CITY COMMENTS	12/10/2014	CS
4.	REVISED PER CITY COMMENTS	03/17/2015	CS
5.	REVISED PER CITY COMMENTS	05/01/2015	CS
6.	REVISED PER CITY COMMENTS	05/15/2015	CS
7.	SITE PLAN SUBMISSION	10/31/2016	CS

Previous Editions Obsolete

APPLICANT/OWNER:
FRENCH-AMERICAN SCHOOL OF NEW YORK
525 FENIMORE ROAD
MAMARONECK, NY 10543

ARCHITECT:
STANTEC
400 MORGAN CENTER
101 EAST DIAMOND STREET
BUTLER, PA 16001-5923

JMC Planning, Engineering, Landscape Architecture & Land Surveying, PLLC
JMC Site Development Consultants, LLC
John Meyer Consulting, Inc.
120 BEDFORD ROAD • ARMONK, NY 10504
voice 914.273.5225 • fax 914.273.2102
www.jmcpllc.com

SITE EXISTING CONDITIONS PLAN

FRENCH-AMERICAN SCHOOL OF NEW YORK
3136 RIDGEWAY
CITY OF WHITE PLAINS, NEW YORK

DRAWN:	CS
APPROVED:	RR
SCALE:	1" = 50'
DATE:	05/05/2014
PROJECT No:	10170
JMC-10170-EXISTING	DAB: AREA-01 SP
SOR:	EXISTING
DRAWING No:	SP-2

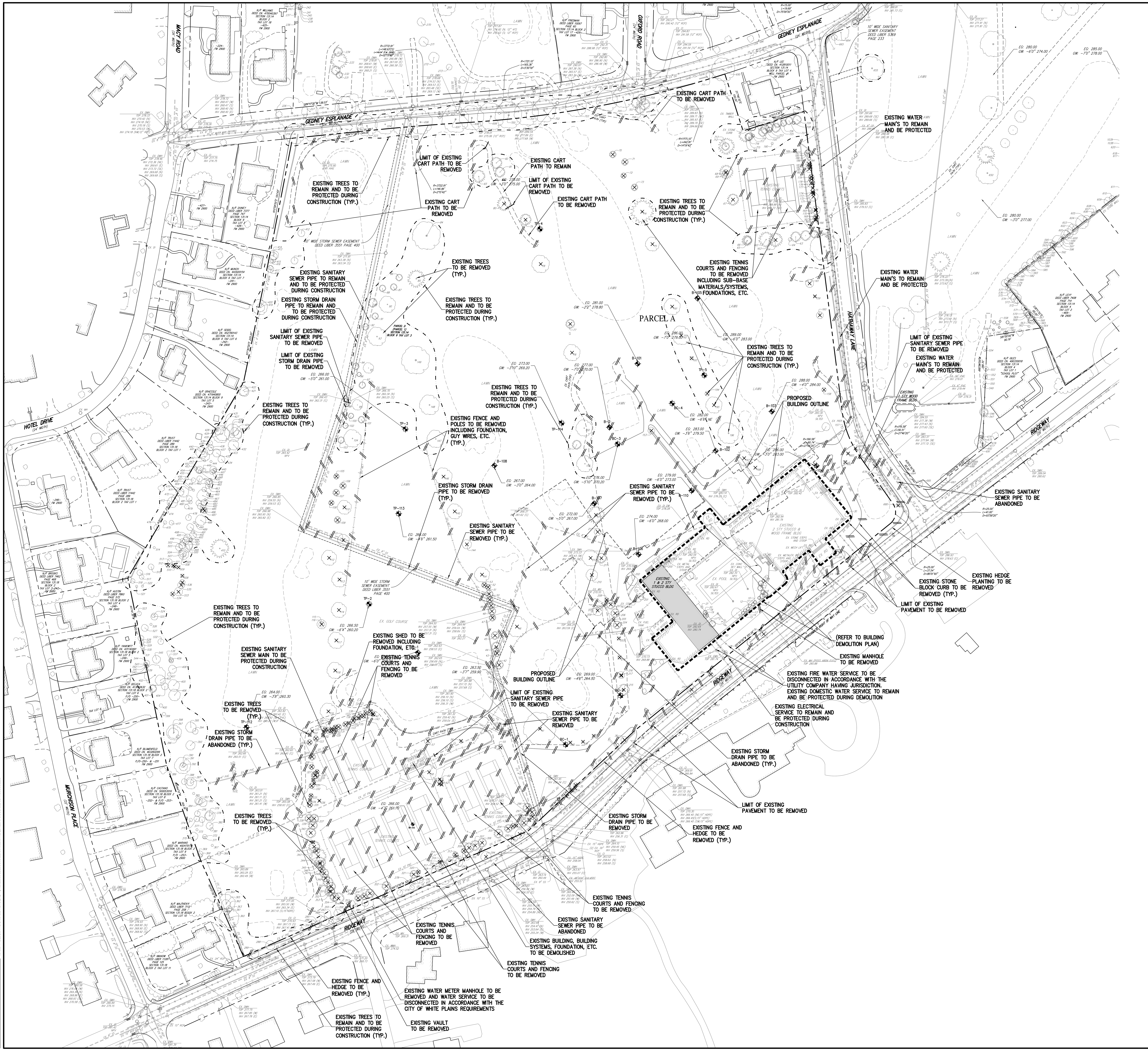

COPYRIGHT © 2016 by JMC. All Rights Reserved. No part of this document may be reproduced, stored in a retrieval system, or transmitted in any form or by means, electronic, mechanical, photocopying, recording or otherwise, without the prior written permission of JMC PLANNING, ENGINEERING, LANDSCAPE ARCHITECTURE & LAND SURVEYING, PLLC | JMC SITE DEVELOPMENT CONSULTANTS, LLC | JOHN MEYER CONSULTING, INC. (JMC). Any modifications or alterations to this document without the written permission of JMC shall render them invalid and unusable.

LEGEND

- EXISTING PROPERTY LINE
- ADJACENT PROPERTY LINE
- EXISTING EASEMENT LINE
- EXISTING WETLAND LINE AND DELINEATION (WLF-63, WLF-64, WLF-65)
- EXISTING BUILDING OVERHANG
- EXISTING BUILDING LINE
- EXISTING PAVEMENT EDGE
- EXISTING CURB LINE
- EXISTING CONTOUR (172)
- EXISTING INDEX CONTOUR (170)
- EXISTING TREE AND DESIGNATION (T10 M)
- EXISTING TREE TO BE REMOVED (T10 M)
- EXISTING TREE LINE
- EXISTING STORM DRAIN LINE AND SIZE (36" RCP)
- EXISTING SANITARY LINE AND SIZE (8" SAN)
- EXISTING WATER LINE
- EXISTING GAS LINE
- EXISTING OVERHEAD WIRES
- EXISTING DRAIN INLET
- EXISTING MANHOLE
- EXISTING FIRE HYDRANT
- EXISTING GAS VALVE (GV)
- EXISTING WATER VALVE (WV)
- EXISTING UTILITY POLE
- EXISTING LIGHT POLE
- EXISTING SIGN
- EXISTING FEATURE TO BE REMOVED
- NOT IN CONTRACT (REFER TO BUILDING DEMOLITION PLAN)
- EXISTING TREES AREA TO BE PROTECTED
- PROPOSED BUILDING OUTLINE

NOTES:

1. EXISTING CONDITIONS DEPICTED ON THIS PLAN HAVE BEEN TAKEN FROM SURVEY TITLED, "TOPOGRAPHIC AND UTILITIES SURVEY," PREPARED BY JOHN MEYER CONSULTING, P.C., LAST UPDATED MARCH 13, 2015.
2. THE CONTRACTOR SHALL VERIFY THE LOCATION OF EXISTING UTILITIES TO BE DEMOLISHED AND EXISTING UTILITIES TO BE PROTECTED. IF ANY DISCREPANCIES ARE FOUND, THE CONTRACTOR SHALL NOTIFY THE GENERAL CONTRACTOR AND JOHN MEYER CONSULTING PRIOR TO THE START OF CONSTRUCTION.
3. PRIOR TO THE START OF ANY DEMOLITION THE CONTRACTOR SHALL OBTAIN ALL NECESSARY PERMITS AND/OR APPROVALS FROM THE CITY OF WHITE PLAINS AND ALL OTHER AUTHORITIES HAVING JURISDICTION. CONTRACTOR SHALL PAY ALL OUTSTANDING FEES, CHARGES, AND DEPOSITS TO ACQUIRE SAID PERMITS. NO DEMOLITION SHALL COMMENCE UNTIL A PERMIT HAS BEEN OBTAINED FROM CITY OF WHITE PLAINS.
4. THE CONTRACTOR SHALL COORDINATE THE DISCONNECTION OF ALL UTILITIES WITH THE UTILITY COMPANY HAVING JURISDICTION PRIOR TO THE START OF DEMOLITION. CONFIRMATION OF DISCONNECTED UTILITIES SHALL BE PROVIDED TO THE CITY OF WHITE PLAINS BUILDING DEPARTMENT IN ACCORDANCE WITH THEIR REQUIREMENTS. LETTERS FROM THE APPROPRIATE UTILITIES STATING THAT GAS AND ELECTRIC HAVE BEEN CUT OFF SHALL BE PROVIDED TO THE CITY OF WHITE PLAINS.
5. THE CONTRACTOR SHALL OBTAIN, AND PROVIDE A COPY TO THE CITY OF WHITE PLAINS, A SEWER PLUG PERMIT INDICATING THAT A LICENSED PLUMBER HAS PLUGGED ALL EXISTING SEWER LINES TO THE EXISTING BUILDING. THE CONTRACTOR SHALL OBTAIN, AND PROVIDE A COPY TO THE CITY OF WHITE PLAINS, A WATER USE PERMIT INDICATING THAT A LICENSED PLUMBER HAS CUT AND SEALED ALL EXISTING WATER SERVICE TO THE EXISTING BUILDING.
6. ANY UNSUITABLE MATERIAL FOUND ON-SITE DURING DEMOLITION/CONSTRUCTION, AS DETERMINED BY THE PROJECT'S GEOTECHNICAL ENGINEER, SHALL BE PROPERLY DISPOSED OF OFF-SITE IN A MANNER APPROVED BY ALL AUTHORITIES HAVING JURISDICTION AND REPLACED WITH SUITABLE MATERIAL AS REQUIRED.
7. ANY UNSUITABLE MATERIAL FOUND ON-SITE DURING CONSTRUCTION SHALL BE DISPOSED OF OFF-SITE IN A MANNER APPROVED BY ALL AUTHORITIES HAVING JURISDICTION AND REPLACED WITH SUITABLE MATERIAL AS REQUIRED. ALL REMOVAL AND REPLACEMENT OF UNSUITABLE MATERIAL SHALL BE COMPLETED UNDER THE DIRECT SUPERVISION OF A GEOTECHNICAL ENGINEER.
8. ALL DEMOLITION AND/OR CONSTRUCTION WITHIN THE RIGHT-OF-WAY, INCLUDING STREETS AND SIDEWALKS, SHALL BE PERFORMED IN ACCORDANCE WITH CITY OF WHITE PLAINS.
9. ALL CONSTRUCTION/DEMOLITION DEBRIS NOT PROPOSED TO BE RECYCLED SHALL BE REMOVED AND LEGALLY DISPOSED OF OFF-SITE IN ACCORDANCE WITH THE REGULATIONS OF ALL LOCAL, STATE AND FEDERAL AGENCIES HAVING JURISDICTION.
10. EXISTING CONCRETE MAY BE STORED ON SITE, AND RECYCLED FOR USE AS COMPACTED FILL. ALL MATERIAL TO BE USED AS FILL SHALL BE APPROVED BY THE PROJECT GEOTECHNICAL ENGINEER.
11. PRIOR TO THE START OF SITE DEMOLITION, EROSION AND SEDIMENT CONTROL DEVICES SHALL BE INSTALLED IN ACCORDANCE WITH THE CITY OF WHITE PLAINS AND NYSDEC REQUIREMENT, AS REQUIRED AND/OR DIRECTED BY THE CITY OF WHITE PLAINS OR JOHN MEYER CONSULTING, PC.
12. EXISTING DRAINAGE PATTERNS ON SITE SHALL BE MAINTAINED TO THE MAXIMUM EXTENT PRACTICABLE.
13. ALL EXISTING UTILITY CASTINGS WHICH ARE TO REMAIN SHALL BE REMOVED AND RESET TO THE NEW PROPOSED GRADES IN ACCORDANCE WITH THE DIRECTIONS OF THE OWNER'S FIELD REPRESENTATIVE. EXISTING CASTINGS WHICH ARE DAMAGED OR UNFIT FOR INSTALLATION IN THE NEW CONSTRUCTION, AS DETERMINED BY THE OWNER'S FIELD REPRESENTATIVE, SHALL BE REPLACED.
14. ALL EXISTING SIDEWALKS, CURBS, PAVEMENT, ETC. TO REMAIN, WHICH ARE DISTURBED OR DAMAGED DUE TO THE NEW CONSTRUCTION, ARE TO BE REPLACED WITH MATERIALS CONSISTENT WITH EXISTING CONDITIONS.
15. THESE PLANS ARE TO BE PROVIDED TO BOTH THE DEMOLITION CONTRACTOR AND THE SITE CONTRACTOR FOR THEIR USE, INFORMATION AND COORDINATION. ANY QUESTIONS OF CONTRACTOR RESPONSIBILITY AND/OR SEPARATION OF WORK SHALL BE DIRECTED TO THE GENERAL CONTRACTOR IN WRITING PRIOR TO ISSUANCE OF BID.
16. THE OWNER SHALL RETAIN A LICENSED AND QUALIFIED PROFESSIONAL, CERTIFIED BY THE CITY OF WHITE PLAINS, TO INSPECT FOR THE PRESENCE OF ASBESTOS AND/OR OTHER HAZARDOUS MATERIALS WITHIN DEMOLITION AREAS PRIOR TO THE COMMENCEMENT OF DEMOLITION. IF REMEDIATION IS REQUIRED, THE OWNER SHALL DO SO IN ACCORDANCE WITH THE CITY OF WHITE PLAINS ASBESTOS RULES AND REGULATIONS AND/OR ANY AUTHORITIES HAVING JURISDICTION. THE CONTRACTOR SHALL PROVIDE ALL REQUIRED DOCUMENTATION TO THE CITY OF WHITE PLAINS PRIOR TO OBTAINING A DEMOLITION PERMIT.
17. THE CONTRACTOR SHALL EXTERMINATE RODENTS AS REQUIRED BY WESTCHESTER COUNTY DEPARTMENT OF HEALTH AND MENTAL HYGIENE. A LETTER FROM THE HEALTH DEPARTMENT CERTIFYING THAT A LICENSED EXTERMINATOR HAS TREATED THE EXITING BUILDING SHALL BE PROVIDED TO THE CITY OF WHITE PLAINS DEPARTMENT OF BUILDINGS.
18. PRIOR TO COMMENCEMENT OF DEMOLITION, THE CONTRACTOR MUST PROVIDE 24-HOUR NOTIFICATION TO THE CITY OF WHITE PLAINS.
19. THE CONTRACTOR SHALL PROVIDE VERIFICATION TO THE CITY OF WHITE PLAINS THAT FIVE (5) DAYS' PRIOR NOTIFICATION WAS GIVEN TO ALL ADJOINING OWNERS AND THAT NOTIFICATION WAS GIVEN TO THE APPROPRIATE COMMUNITY BOARD PRIOR TO THE COMMENCEMENT OF DEMOLITION.
20. ALL EXISTING TREES NOT SHOWN TO BE REMOVED SHALL BE PROTECTED DURING CONSTRUCTION.
21. UNLESS OTHERWISE DIRECTED CONTRACTOR REQUIRE TO REMOVE ALL SITE FEATURES ABOVE AND UNDER GROUND WITHIN LIMIT OF SITE DISTURBANCE AS DIRECTED BY TO OWNER'S FIELD REPRESENTATIVE.
22. IN ACCORDANCE WITH THE GEOTECHNICAL ENGINEER, ALL EXISTING UTILITIES AND SITE FEATURES WITHIN THE BUILDING FOOTPRINT SHALL BE REMOVED.
23. GEOTECHNICAL BORING/TEST PIT LOCATIONS DEPICTED ON THIS PLAN WERE TAKEN FROM THE GEOTECHNICAL REPORT ENTITLED, "REPORT ON SUBSURFACE SOIL AND FOUNDATION INVESTIGATION", LAST REVISED ON 10/02/2014, PREPARED BY CARLIN-SIMPSON & ASSOCIATES.

ANY ALTERATION OF PLANS, SPECIFICATIONS, PLATS AND REPORTS BEARING THE SEAL OF A LICENSED PROFESSIONAL ENGINEER OR LICENSED LAND SURVEYOR IS A VIOLATION OF SECTION 7209 OF THE NEW YORK STATE EDUCATION LAW, EXCEPT AS PROVIDED FOR BY SECTION 7209, SUBSECTION 2.

No.	Revision	Date	By
1.	SITE PLAN SUBMISSION	05/19/2014	CS
2.	REVISED PER CITY COMMENTS	10/20/2014	CS
3.	REVISED PER CITY COMMENTS	12/10/2014	CS
4.	REVISED PER CITY COMMENTS	03/17/2015	CS
5.	REVISED PER CITY COMMENTS	05/01/2015	CS
6.	REVISED PER CITY COMMENTS	05/15/2015	CS
7.	SITE PLAN SUBMISSION	10/31/2016	CS

Previous Editions Obsolete

APPLICANT/OWNER:
FRENCH-AMERICAN SCHOOL OF NEW YORK
525 FENIMORE ROAD
MAMARONECK, NY 10543

ARCHITECT:
STANTEC
400 MORGAN CENTER
101 EAST DIAMOND STREET
BUTLER, PA 16001-5923

JMC Planning, Engineering, Landscape Architecture & Land Surveying, PLLC
JMC Site Development Consultants, LLC
John Meyer Consulting, Inc.
120 BEDFORD ROAD • ARMONK, NY 10504
voice 914.273.5225 • fax 914.273.2102
www.jmcpllc.com

JMC

SITE DEMOLITION PLAN

FRENCH-AMERICAN SCHOOL OF NEW YORK
336 RIDGEWAY
CITY OF WHITE PLAINS, NEW YORK

DRAWN: CS APPROVED: RR
SCALE: 1" = 50'
DATE: 05/05/2014
PROJECT No: 10170
DWG: 10170-DEMO TAB: AREA-01 SCR: DEMO
DRAWING No: SP-3

SITE LAYOUT PLAN

FRENCH–AMERICAN SCHOOL OF NEW YORK
336 RIDGEWAY
CITY OF WHITE PLAINS, NEW YORK

DRAWN	CS
APPROVED	RR
SCALE	1" = 50'
DATE	05/05/2014
PROJECT NO.	10170
SCALE	
DRAWING NO.	SP–4

ANY ALTERATION OF PLANS, SPECIFICATIONS, PLATS AND REPORTS BEARING THE SEAL OF A LICENSED LAND SURVEYOR BY A NON-LICENSED LAND SURVEYOR IS A VIOLATION OF SECTION 7209 OF THE NEW YORK STATE EDUCATION LAW, EXCEPT AS PROVIDED FOR BY SECTION 7209, SUBSECTION 2.

JMC

JMC Planning, Engineering, Landscape Architecture & Land Surveying, PLLC
JMC Site Development Consultants, LLC
John Meyer Consulting, Inc.
120 BEDFORD ROAD • ARMONK, NY 10504
voice 914.273.5225 • fax 914.273.2102
www.jmcpllc.com

APPLICANT/OWNER
FRENCH–AMERICAN SCHOOL OF NEW YORK
525 FENIMORE ROAD
MAMARONECK, NY 10543

ARCHITECT:
STANTEC
400 MORGAN CENTER
101 EAST DIAMOND STREET
BUTLER, PA 16001-5923

No.	Revision	Date	By
1.	SITE PLAN SUBMISSION	05/19/2014	CS
2.	REVISED PER CITY COMMENTS	10/20/2014	CS
3.	REVISED PER CITY COMMENTS	12/10/2014	CS
4.	REVISED PER CITY COMMENTS	02/17/2015	CS
5.	REVISED PER CITY COMMENTS	05/01/2015	CS
6.	REVISED PER CITY COMMENTS	05/15/2015	CS
7.	SITE PLAN SUBMISSION	10/31/2016	CS

Previous Editions Obsolete

LEGEND

- EXISTING PROPERTY LINE
- ADJACENT PROPERTY LINE
- EXISTING SETBACK LINE
- EXISTING WETLAND LINE AND DELINEATION
- EXISTING BUILDING OVERHANG
- EXISTING BUILDING LINE
- EXISTING PAVEMENT EDGE
- EXISTING CURB LINE
- EXISTING FENCE
- EXISTING TREE AND DESIGNATION
- EXISTING TREE LINE
- EXISTING UTILITY POLE
- EXISTING LIGHT POLE
- EXISTING SIGN
- PROPOSED PROPERTY LINE
- PROPOSED BUILDING LINE
- PROPOSED BUILDING BELOW
- PROPOSED BUILDING OVERHANG
- PROPOSED CONCRETE CURB
- PROPOSED MOUNTABLE CURB
- PROPOSED GRANITE CURB
- PROPOSED DROP CURB & RAMP
- PROPOSED EDGE OF PAVEMENT
- PROPOSED HANDICAPPED PARKING SPACES WITH NUMBER OF SPACES INDICATED
- PROPOSED PARKING SPACES WITH NUMBER OF SPACES INDICATED
- PROPOSED CONCRETE SIDEWALK
- PROPOSED MARKETING CONCRETE SIDEWALK & CURB
- PROPOSED DROP CURB AND RAMP
- PROPOSED HEAVY DUTY PAVEMENT
- PROPOSED SITE PAVEMENT
- PROPOSED CONCRETE PAD AREA
- PROPOSED GRAVEL AREA
- PROPOSED ASPHALT BIKE PATH AREA
- PROPOSED GRAVEL WALKWAY AREA
- PROPOSED WOOD RAIL FENCE
- PROPOSED WOOD GUIDE RAIL
- PROPOSED RETAINING WALL (REFER TO STRUCTURAL DRAWINGS)
- PROPOSED CHAIN LINK FENCE
- PROPOSED 2'-4" WIDE YELLOW LINES @ O.C.
- PROPOSED 1'-4" WIDE WHITE LINE (DASHED–40' REPEAT CYCLE)
- PROPOSED 1'-4" WIDE WHITE LINE
- PROPOSED 12" WIDE WHITE STOP LINE
- PROPOSED 4" WIDE YELLOW HATCH LINES 18" O.C. @ 45°
- PROPOSED ARROW MARKING ON PAVEMENT
- TRAFFIC SIGN LOCATION & DESIGNATION
- PEDESTRIAN CROSSWALK
- PROPOSED LIGHT FIXTURE
- PROPOSED BOLLARD LIGHT FIXTURE (REFER TO ELECTRICAL DRAWINGS)
- PROPOSED BIKE RACK
- EXISTING TREE TO BE REMOVED
- PROPOSED SAWCUT LINE
- LIMIT OF PROPOSED DISTURBANCE SYSTEM

NOTES:

1. GENERAL CONDITIONS DEPICTED ON THIS PLAN HAVE BEEN TAKEN FROM SURVEY TITLED, "TOPOGRAPHIC AND UTILITIES SURVEY", PREPARED BY JOHN MEYER CONSULTING, P.C., LAST UPDATED MARCH 11, 2015.
2. FOR ALL PROPOSED BUILDING FLOOR PLANS REFER TO ARCHITECTURAL DRAWINGS PREPARED BY STANTEC.
3. EXISTING PERIMETER CHAIN LINK FENCE TO REMAIN SHALL BE INSPECTED AND REPAIRED AS REQUIRED BY THE OWNER FIELD REPRESENTATIVE.
4. REFER TO STANTEC DRAWINGS FOR LIGHT FIXTURE LAYOUT AND SCHEDULE.
5. PROPOSED 1'-1/2" DIA. HANDRAIL AS REQUIRED BY ADA SPECIFICATIONS.
6. ALL EXISTING TREES NOT SHOWN TO BE REMOVED SHALL BE PROTECTED DURING CONSTRUCTION.
7. PROPOSED FENCE TO BE INSTALLED IN ACCORDANCE WITH MANUFACTURE REQUIREMENTS.

SIGN TABLE

DESIGNATION HEADER	SIGN	SIZE	DESCRIPTION	MOUNTING TYPE	MOUNTING HEIGHT	REGULATORY	REFLECTORIZED
A	STOP	30"x30"	WHITE ON RED	WOOD	7'–0"	R1–1	X
B	PARKING SIGN	12"x18"	GREEN & BLUE ON WHITE	STEEL CHANNEL	7'–0"	R7–8	X
C	PARKING SIGN	12"x18" 24"x36"	GREEN & BLUE ON WHITE	STEEL CHANNEL	7'–0"	R7–8 R7–8A	X
D	ANY TIME	12"x18"	RED ON WHITE	STEEL CHANNEL	7'–0"	NYP1–2	X
E	ONE WAY	30"x30" 36"x36"	BLACK ON YELLOW	WOOD	7'–0"	W1–2 W1P–2	X
F	ONE WAY	30"x30"	RED ON WHITE	WOOD	7'–0"	R5–1	X
G	ONE WAY	24"x24"	BLACK ON YELLOW WHITE	STEEL CHANNEL	7'–0"	R3–2	X
H	ONE WAY	24"x24"	BLACK ON RED AND WHITE	STEEL CHANNEL	7'–0"	R3–1	X
I	ONE WAY	24"x30"	BLACK ON WHITE	WOOD	7'–0"	R4–7	X
J	TWO WAY	36"x36"	RED ON WHITE	WOOD	7'–0"	R1–2	X
K	SPEED LIMIT	24"x30"	BLACK ON WHITE	WOOD	7'–0"	NYR3–20	X
L	FORWARD PASS ONLY (TEXT)	12"x18"	WHITE ON BLACK	WOOD	7'–0"	–	X
M	FIRE LANE	12"x18"	RED ON WHITE	WOOD	7'–0"	NYFP1–2 (MODIFY)	X
N	CHEVRON	30"x24"	BLACK ON WHITE	WOOD	7'–0"	R6–4	X
O	ONE WAY	36"x12"	WHITE ARROW ON BLACK	WOOD	7'–0"	R6–1L	X
P	DIAMOND	36"x36"	BLACK ON YELLOW	WOOD	7'–0"	17–1 (MODIFY)	X
Q	DIAMOND	36"x36"	BLACK ON YELLOW	WOOD	7'–0"	17–1 (MODIFY)	X
R	SCHOOL CROSSWALK	24"x30"	BLACK ON YELLOW	WOOD	7'–0"	NYS3–20 (MODIFY)	X
S*	MONUMENT SIGN BLOCKER	18"x24"	BLACK ON WHITE	WOOD	7'–0"	*SEE DETAIL 4/L5	X

COPYRIGHT © 2014 JMC, All rights reserved. No part of this document may be reproduced, stored in a retrieval system or transmitted in any form or by means, electronic, mechanical, photocopying, recording or otherwise, without the prior permission of JMC. ALL DRAWINGS, CONCEPTS, DESIGNS AND INFORMATION CONTAINED HEREIN ARE THE PROPERTY OF JMC AND SHALL NOT BE USED, REPRODUCED OR DISCLOSED IN WHOLE OR IN PART WITHOUT THE PRIOR WRITTEN CONSENT OF JMC. Any modifications or alterations to this document without the written permission of JMC shall render them invalid and unusable.

NOT FOR CONSTRUCTION

NOT FOR CONSTRUCTION

COPYRIGHT © 2016 JMC. All rights Reserved. All part of these documents may be reproduced, stored in a retrieval system or transmitted in any form or by means, mechanical, electronic, photocopying, recording or otherwise, without the prior written permission of JMC. And under them vested and unalterable.
CONSULTANTS LLC'S OWN NETWORK CONSULTING SERVICES. ANY MODIFICATIONS OR REVISIONS TO THESE DRAWINGS WITHOUT JMC'S WRITTEN CONSENT SHALL RENDER THE DRAWINGS INVALID AND UNUSABLE.

ANY ALTERATION OF PLANS, SPECIFICATIONS, PLATS AND REPORTS BEARING THE SEAL OF A LICENSED LAND SURVEYOR IS A VIOLATION OF SECTION 7209 OF THE NEW YORK STATE EDUCATION LAW, EXCEPT AS PROVIDED FOR BY SECTION 7209, SUBSECTION 2.

DRAWN	RR
CHECKED	CS
SCALE	1" = 50'
DATE	05/05/2014
PROJECT No.	10170
FILE No.	1015-2006C
SHEET	SP-5

SITE GRADING PLAN

FRENCH-AMERICAN SCHOOL OF NEW YORK
336 RIDGEWAY
CITY OF WHITE PLAINS, NEW YORK

JMC Planning, Engineering, Landscape Architecture & Land Surveying, PLLC
JMC Site Development Consultants, LLC
John Meyer Consulting, Inc.
120 BEDFORD ROAD • ARMONK, NY 10504
voice 914.273.5225 • fax 914.273.2102
www.jmcpllc.com

ARCHITECT:
STANTEC
400 MORGAN CENTER
101 EAST DIAMOND STREET
BUTLER, PA 16001-5923

ARCHITECT:
MAMARONECK, NY 10543
525 FENIMORE ROAD
FRENCH-AMERICAN SCHOOL OF NEW YORK

NO.	REVISION	DATE	BY
1.	SITE PLAN SUBMISSION	05/19/2014	CS
2.	REVISED PER CITY COMMENTS	10/20/2014	CS
3.	REVISED PER CITY COMMENTS	12/20/2014	CS
4.	REVISED PER CITY COMMENTS	03/17/2015	CS
5.	REVISED PER CITY COMMENTS	05/01/2015	CS
6.	REVISED PER CITY COMMENTS	05/15/2015	CS
7.	SITE PLAN SUBMISSION	10/31/2016	CS

Previous Editions Obsolete

LEGEND

- EXISTING PROPERTY LINE
- ADJACENT PROPERTY LINE
- EXISTING EASEMENT LINE
- EXISTING WETLAND LINE AND DELINEATION
- EXISTING BUILDING OVERHANG
- EXISTING BUILDING LINE
- EXISTING PAVEMENT EDGE
- EXISTING CURB LINE
- EXISTING CONTOUR
- EXISTING INDEX CONTOUR
- EXISTING FENCE
- EXISTING DRAIN INLET
- EXISTING MANHOLE
- EXISTING UTILITY POLE
- EXISTING LIGHT POLE
- EXISTING SIGN
- PROPOSED BUILDING LINE
- PROPOSED CURB
- PROPOSED CONCRETE SIDEWALK
- PROPOSED ROOF GUTTER AND RAMP
- PROPOSED FINISHED GRADE
- PROPOSED SPOT GRADE
- PROPOSED SANITARY SEWER MANHOLE
- PROPOSED STORM DRAIN MANHOLE
- PROPOSED TYPE C1 DRAIN INLET
- PROPOSED TYPE D1 DRAIN INLET
- PROPOSED HEADWALL
- PROPOSED CDS UNIT
- PROPOSED SUBSURFACE DRAINAGE OUTLET CONTROL STRUCTURE
- PROPOSED HYDRANT
- PROPOSED STORM PIPE AND FLOW DIRECTION (DESIGN BY OTHERS)
- PROPOSED RETAINING WALL (DESIGN BY OTHERS)
- BORING LOCATION AND DESIGNATION
- PROPOSED SWALE
- PROPOSED VEGETATED SWALE
- PROPOSED RIP-RAP

NOTES:

1. EXISTING CONDITIONS DEPICTED ON THIS PLAN HAVE BEEN TAKEN FROM SURVEY TITLED, "TOPOGRAPHIC AND UTILITIES SURVEY," PREPARED BY JOHN MEYER CONSULTING, INC., DATED 10/15/2014.
2. GEOTECHNICAL BORING/TEST PIT LOCATIONS DEPICTED ON THIS PLAN WERE TAKEN FROM THE GEOTECHNICAL REPORT ENTITLED, "REPORT ON SUBSURFACE INVESTIGATION," PREPARED BY ZARLIN-SIMPSON & ASSOCIATES, DATED ON 10/10/2014.
3. ALL EXISTING UTILITY CASTINGS WHICH ARE TO REMAIN SHALL BE REMOVED AND RESET TO FINISH GRADE AS REQUIRED BY THE PROPOSED GRADING. ALL EXISTING CASTINGS IN THE DIRECTION OF THE OWNER'S FIELD REPRESENTATIVE. EXISTING CASTINGS WHICH ARE DAMAGED DURING CONSTRUCTION SHALL BE REPLACED WITH NEW CASTINGS AS DETERMINED BY THE OWNER'S FIELD REPRESENTATIVE, SHALL BE REPLACED.

(PROPOSED GRADE) TW (PROPOSED GRADE)
BSW

RETAINING WALL SPOT GRADE LEGEND

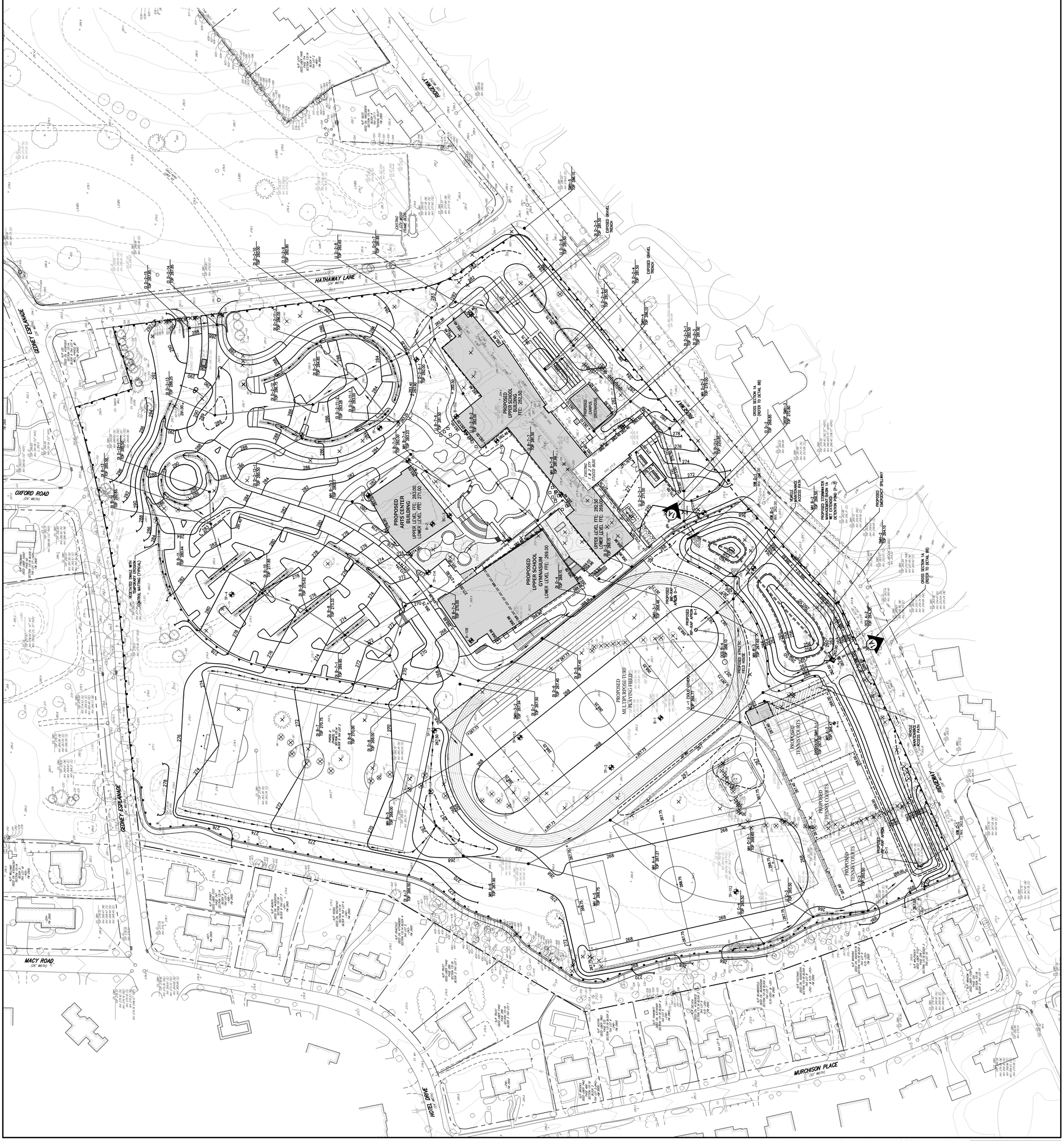

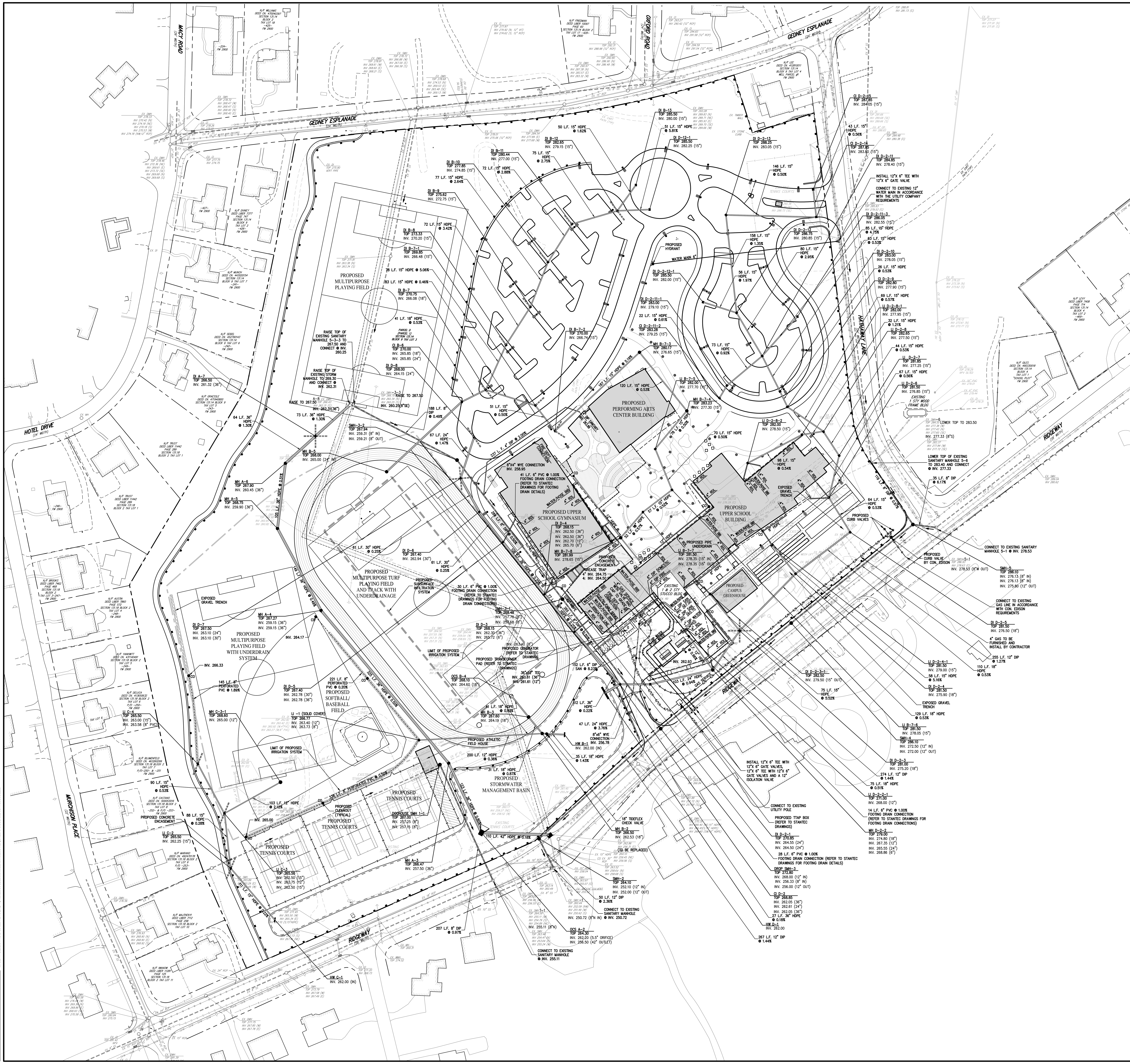

LEGEND

	EXISTING PROPERTY LINE
	ADJACENT PROPERTY LINE
	EXISTING EASEMENT LINE
	EXISTING BUILDING OVERHANG
	EXISTING BUILDING LINE
	EXISTING PAVEMENT EDGE
	EXISTING CURB LINE
	EXISTING CART PATH
	LIMIT OF EXISTING FAIRWAY
	EXISTING RETAINING WALL
	EXISTING STONE WALL
	EXISTING RETAINING WALL
X	EXISTING FENCE
36" RCP	EXISTING STORM DRAIN LINE AND SIZE
8" SAN	EXISTING SANITARY LINE AND SIZE
W	EXISTING WATER LINE
G	EXISTING GAS LINE
OHW	EXISTING OVERHEAD WIRES
E	EXISTING ELECTRIC LINE
	EXISTING DRAIN INLET
	EXISTING MANHOLE
	EXISTING FIRE HYDRANT
GV	EXISTING GAS VALVE
WV	EXISTING WATER VALVE
	EXISTING UTILITY POLE
	EXISTING SIGN
	PROPOSED BUILDING LINE
	PROPOSED CONCRETE CURB
	PROPOSED LIGHT FIXTURE (REFER TO STANTEC DRAWINGS)
SMH	PROPOSED SANITARY SEWER MANHOLE
MH	PROPOSED STORM DRAIN MANHOLE
CO	PROPOSED CLEAN OUT
CI	PROPOSED TYPE CI DRAIN INLET
DI	PROPOSED TYPE DI DRAIN INLET
	PROPOSED FINGER UNDERDRAIN
HW	PROPOSED HEADWALL
OCS	PROPOSED OUTLET CONTROL STRUCTURE
ES	PROPOSED END SECTION
OCS	PROPOSED OUTLET CONTROL STRUCTURE
	PROPOSED CDS UNIT
	PROPOSED PIPE UNDERDRAIN
15" HDPE	PROPOSED STORM DRAIN LINE AND SIZE
8" DIP	PROPOSED SANITARY SEWER LINE AND SIZE
	PROPOSED HYDRANT
8" DIP	PROPOSED WATER LINE & SIZE
E/T/C	PROPOSED ELEC/TEL/CABLE SERVICE
E/TC	PROPOSED ELECTRICAL & TELECOM SERVICE
TC	PROPOSED TELECOM SERVICE
E	PROPOSED ELECTRICAL SERVICE
G	PROPOSED GAS SERVICE
	PROPOSED RETAINING WALL (DESIGN BY OTHERS)
	PROPOSED CONCRETE ENCASEMENT
	PROPOSED RIP-RAP
	PROPOSED PERFORATED PVC PIPE
	PROPOSED WATER/HOSE BIB (REFER TO PLUMBING DRAWINGS)

NOTES:

1. EXISTING CONDITIONS DEPICTED ON THIS PLAN HAVE BEEN TAKEN FROM SURVEY TITLED, "TOPOGRAPHIC AND UTILITIES SURVEY," PREPARED BY JOHN MEYER CONSULTING, P.C., DATED JULY 06, 2011.
2. CONTRACTOR SHALL USE THE LATEST CITY OF WHITE PLAINS DEPARTMENT OF PUBLIC WORKS DETAILS AND STANDARDS FOR ALL PERTINENT CONSTRUCTION.
3. UNLESS OTHERWISE SPECIFIED, PIPE FOR STORM DRAINS SHALL BE HIGH DENSITY POLYETHYLENE PIPE (HDPE) WITH A SMOOTH INTERIOR AND ANNULAR EXTERIOR CORRUGATIONS IN ACCORDANCE WITH ASTM F-2648. JOINTS SHALL BE WATERTIGHT IN ACCORDANCE WITH ASTM D-3212.
4. UNLESS OTHERWISE SPECIFIED, PIPE FOR SANITARY SEWER GRAVITY LINES SHALL BE DUCTILE IRON PIPE (DIP), CLASS 56, WITH PUSH-ON JOINTS IN ACCORDANCE WITH AWWA C-150, C-151 AND C-111.
5. UNLESS OTHERWISE SPECIFIED, PIPE FOR WATER LINES SHALL BE DOUBLE CEMENT-LINED DUCTILE IRON PIPE (DIP), CLASS 56, WITH MECHANICAL JOINTS IN ACCORDANCE WITH AWWA C-150, C-151, C-104 AND C-111.
6. UNLESS OTHERWISE SPECIFIED, PIPE FOR SANITARY SEWER FORCE MAINS SHALL BE POLYVINYL CHLORIDE PRESSURE PIPE (PVCPP), SDR-26, 160 PSI, WITH PUSH-ON JOINTS IN ACCORDANCE WITH ASTM D-2241.
7. ELECTRIC, TELEPHONE, FIRE ALARM AND CABLE TELEVISION LINES SHALL BE INSTALLED UNDERGROUND IN CONDUIT IN ACCORDANCE WITH THE REQUIREMENTS OF THE UTILITY COMPANY HAVING JURISDICTION.
8. MANHOLES WITHIN PLAYING FIELDS SHALL BE BURIED 12" BELOW FINISHED GRADE.
9. ALL EXISTING UTILITY CASTINGS WHICH ARE TO REMAIN SHALL BE REMOVED AND RESET TO THE NEW PROPOSED GRADES IN ACCORDANCE WITH THE DIRECTIONS OF THE OWNER'S FIELD REPRESENTATIVE. EXISTING CASTINGS WHICH ARE DAMAGED OR UNFIT FOR INSTALLATION IN THE NEW CONSTRUCTION, AS DETERMINED BY THE OWNER'S FIELD REPRESENTATIVE, SHALL BE REPLACED.
10. REFER TO STANTEC DRAWINGS FOR SITE LIGHTING.
11. REFER TO STANTEC DRAWINGS FOR SITE ELECTRICAL REQUIREMENTS AND DESIGN INFORMATION.
12. ALL TRENCHING WITHIN THE RIGHT-OF-WAY SHALL BE DONE IN ACCORDANCE WITH THE AUTHORITY HAVING JURISDICTION.
13. UNLESS OTHERWISE SPECIFIED, ALL ROOF DRAIN LEADERS SHALL BE FOUR INCHES.
14. A REPRESENTATIVE OF JMC MUST BE PRESENT DURING INSTALLATION OF ALL PROPOSED STORMWATER FACILITIES.
15. THE WATER MAIN MUST BE TESTED FOR LEAKAGE AND THE PRESSURE TESTING MUST BE IN ACCORDANCE WITH AWWA STANDARDS.
16. THE WATER MAIN MUST BE DISINFECTED IN ACCORDANCE WITH THE LATEST AWWA STANDARDS, WITH THE EXCEPTION OF SECTION 5.1 WHICH IS NOT APPROVABLE, AND THE REQUIRED BACTERIOLOGICAL SAMPLING MUST BE PERFORMED. THE BACTERIOLOGICAL SAMPLE RESULTS MUST BE SUBMITTED TO WCDOH AS PART OF THE CERTIFICATE OF CONSTRUCTION AND MUST BE ACCEPTED BY THE WCDOH PRIOR TO USE OF THE MAIN.
17. THE WATER MAIN MUST BE INSTALLED AT A MINIMUM OF FOUR (4) FEET BELOW THE GROUND SURFACE.
18. FOR EXFILTRATION/INFILTRATION TESTS: LEAKAGE SHALL NOT EXCEED 100 GALLONS PER INCH OF PIPE DIAMETER PER MILE PER DAY. WATER TESTS SHALL BE PERFORMED UNDER A MINIMUM POSITIVE HEAD OF TWO (2) FEET (FIVE (5) FEET FOR WCDEF SEWERS). LOW PRESSURE AIR TESTING IS PERMITTED FOR PIPE LINES AND SHOULD CONFORM TO ASTM C-828. VACUUM TESTING IS PERMITTED FOR MANHOLES, BUT IS NOT PERMISSIBLE FOR PIPELINES
19. THE WCDOH MUST BE NOTIFIED, IN WRITING, 48 HOURS IN ADVANCE BEFORE ANY TESTING IS DONE ON THE WATER MAIN, SEWER MAIN AND MANHOLES.
20. THE UNDERGROUND ELECTRIC, TELEPHONE AND CABLE LINE DEPICTED ON THIS PLAN ARE APPROXIMATE AND MUST BE COORDINATED WITH THE UTILITY COMPANY HAVING JURISDICTION.
21. THE CONTRACTOR IS RESPONSIBLE FOR MAINTAINING WATER SERVICE TO THE SURROUNDING HOMES DURING THE INSTALLATION OF THE VARIOUS IMPROVEMENTS IN NORTH STREET AND ROGER PLACE. TEMPORARY LINE STOPS AS SHOWN ON THE SITE PLANS SHALL BE REQUIRED TO MAINTAIN THE EXISTING WATER SERVICES. TEMPORARY WATER SERVICE MAY ALSO BE REQUIRED.
22. ALL PROPOSED STORMWATER, SANITARY SEWER AND WATER MAIN IMPROVEMENTS SHALL BE CONSTRUCTED IN ACCORDANCE WITH THE CITY OF WHITE PLAINS REQUIREMENTS AS DISCUSSED AND ILLUSTRATED ON DRAWINGS SP-52.
23. ALL TRENCHING AND ASSOCIATED BACKFILL REQUIREMENTS SHALL BE COMPLETED IN ACCORDANCE WITH THE AUTHORITY HAVING JURISDICTION.
24. UPON COMPLETION OF CONSTRUCTION, ALL PAVEMENTS AND STORM DRAIN SYSTEMS WITHIN OR AFFECTED BY THE SITE DISTURBANCE SHALL BE CLEANED OF ALL ACCUMULATED SEDIMENT IN CONJUNCTION WITH THE REMOVAL OF ALL TEMPORARY SEDIMENT AND EROSION CONTROL DEVICES.

NO.	REVISION	DATE	BY
3.	REVISED PER CITY COMMENTS	10/20/2014	CS
4.	REVISED PER CITY COMMENTS	12/10/2014	CS
5.	REVISED PER CITY COMMENTS	03/17/2015	CS
6.	REVISED PER CITY COMMENTS	05/01/2015	CS
7.	REVISED PER CITY COMMENTS	05/06/2015	BD
8.	REVISED PER CITY COMMENTS	05/15/2015	CS
9.	SITE PLAN SUBMISSION	10/31/2016	CS

Previous Editions Obsolete

APPLICANT/OWNER:
FRENCH-AMERICAN SCHOOL OF NEW YORK
525 FENIMORE ROAD
MAMARONECK, NY 10543

ARCHITECT:
STANTEC
400 MORGAN CENTER
101 EAST DIAMOND STREET
BUTLER, PA 16001-5923

JMC Planning, Engineering, Landscape Architecture & Land Surveying, PLLC
JMC Site Development Consultants, LLC
John Meyer Consulting, Inc.
120 BEDFORD ROAD • ARMONK, NY 10504
voice 914.273.5225 • fax 914.273.2102
www.jmcpllc.com

JMC

SITE UTILITIES PLAN

FRENCH-AMERICAN SCHOOL OF NEW YORK
336 RIDGEWAY
CITY OF WHITE PLAINS, NEW YORK

ANY ALTERATION OF PLANS, SPECIFICATIONS, PLATS AND REPORTS BEARING THE SEAL OF A LICENSED PROFESSIONAL ENGINEER OR LICENSED LAND SURVEYOR IS A VIOLATION OF SECTION 7209 OF THE NEW YORK STATE EDUCATION LAW, EXCEPT AS PROVIDED FOR BY SECTION 7209, SUBSECTION 2.

DRAWN: CS	APPROVED: RR
SCALE: 1" = 50'	
DATE: 05/05/2014	
PROJECT No: 10170	
DWG: 10170-UTILITIES	TAB: AREA-01 / SCR: UTILITIES
DRAWING No: SP-6	

COPYRIGHT © 2016 by JMC All Rights Reserved. No part of this document may be reproduced, stored in a retrieval system, or transmitted in any form or by means, electronic, mechanical, photocopying, recording or otherwise, without the prior written permission of JMC PLANNING, ENGINEERING, LANDSCAPE ARCHITECTURE & LAND SURVEYING, PLLC | JMC SITE DEVELOPMENT CONSULTANTS, LLC | JOHN MEYER CONSULTING, INC. (JMC). Any modifications or alterations to this document without the written permission of JMC shall render them invalid and unusable.

NOT FOR CONSTRUCTION

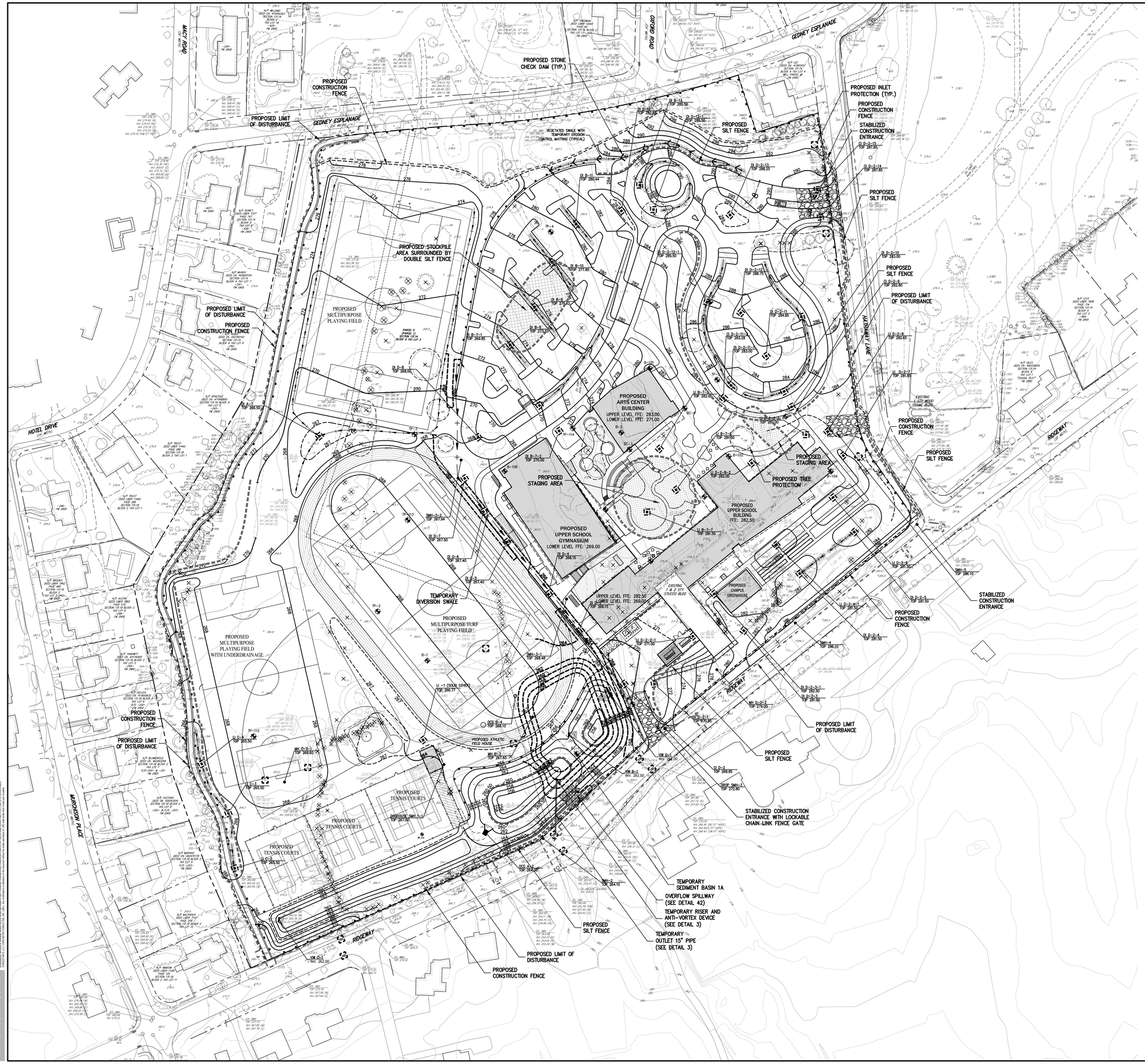

NO.	REVISION	DATE	BY
1.	SITE PLAN SUBMISSION	05/19/2014	CS
2.	REVISED PER CITY COMMENTS	10/20/2014	CS
3.	REVISED PER CITY COMMENTS	12/10/2014	CS
4.	REVISED PER CITY COMMENTS	03/17/2015	CS
5.	REVISED PER CITY COMMENTS	05/01/2015	CS
6.	REVISED PER CITY COMMENTS	05/15/2015	CS
7.	SITE PLAN SUBMISSION	10/31/2016	CS

Previous Editions Obsolete

APPLICANT/OWNER:
FRENCH–AMERICAN SCHOOL OF NEW YORK
525 FENIMORE ROAD
MAMARONECK, NY 10543

ARCHITECT:
STANTEC
400 MORGAN CENTER
101 EAST DIAMOND STREET
BUTLER, PA 16001–5923

JMC Planning, Engineering, Landscape Architecture & Land Surveying, PLLC
JMC Site Development Consultants, LLC
John Meyer Consulting, Inc.
120 BEDFORD ROAD • ARMONK, NY 10504
voice 914.273.5225 • fax 914.273.2102
www.jmcpllc.com

SITE SEDIMENT & EROSION CONTROL PLAN

FRENCH–AMERICAN SCHOOL OF NEW YORK
525 RIDGEWAY
CITY OF WHITE PLAINS, NEW YORK

DRAWN:	CS
APPROVED:	RR
SCALE:	1" = 50'
DATE:	05/05/2014
PROJECT No:	10170
DWG:	1870-SE
CAD:	ARCH-01
SCR:	SAE
DRAWING No:	SP–7

ANY ALTERATION OF PLANS, SPECIFICATIONS, PLATS AND REPORTS BEARING THE SEAL OF A LICENSED PROFESSIONAL ENGINEER OR LICENSED LAND SURVEYOR IS A VIOLATION OF SECTION 7209 OF THE NEW YORK STATE EDUCATION LAW, EXCEPT AS PROVIDED FOR BY SECTION 7209, SUBSECTION 2.

COPYRIGHT © by JMC All Rights Reserved. No part of this document may be reproduced, stored in a retrieval system, or transmitted in any form or by means, electronic, mechanical, photocopying, recording, or otherwise without the prior written permission of JMC. Any unauthorized use of this document shall be at the sole risk of the user, and the user agrees to defend, indemnify and hold harmless JMC from any and all claims, liability, losses and damages arising out of or resulting therefrom. Any unauthorized reuse of this document will be considered prima facie evidence that the copyright infringement was willful and deliberate.

NOT FOR CONSTRUCTION

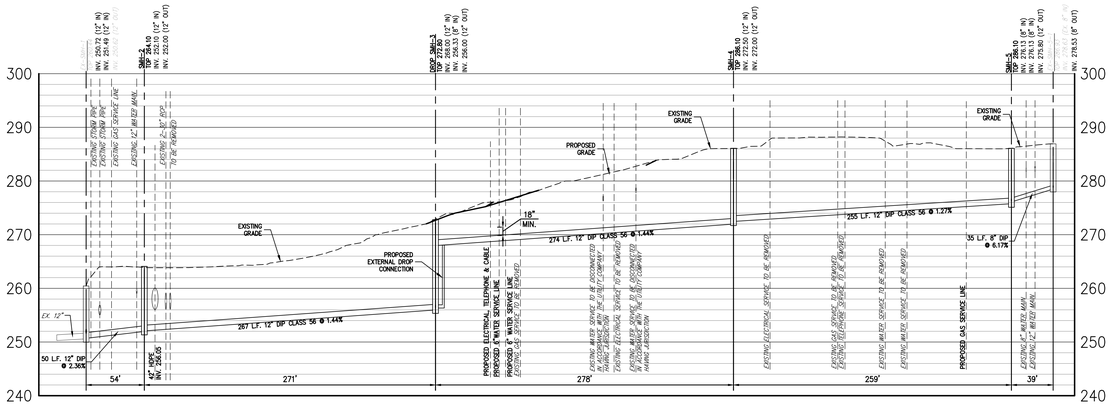

EX SMH-5-1 TO EX-SMH-1

SCALE: VERT. 1" = 10'
HORZ. 1" = 50'

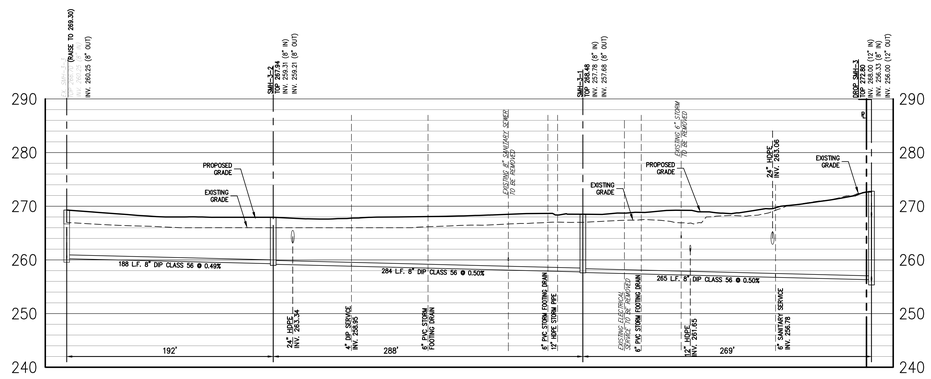

EX SMH-3-3 TO SMH-3

SCALE: VERT. 1" = 10'
HORZ. 1" = 50'

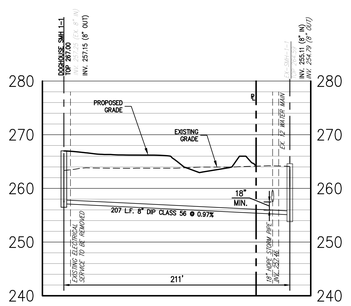

DOGHOUSE SMH-1-1 TO EX SMH-1-1

SCALE: VERT. 1" = 10'
HORZ. 1" = 50'

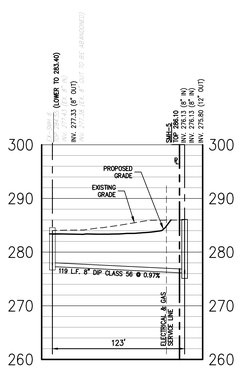

EX SMH-6 TO SMH-5

SCALE: VERT. 1" = 10'
HORZ. 1" = 50'

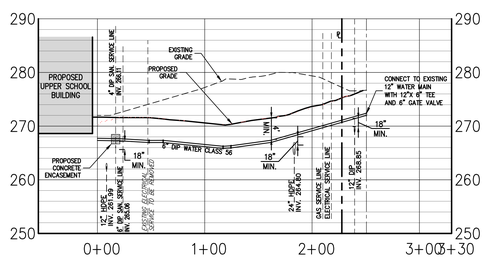

WATER SERVICE PROFILE

SCALE: VERT. 1" = 10'
HORZ. 1" = 50'

NO.	REVISION	DATE	BY
1.	REVISED PER CITY COMMENTS	10/20/2014	CS
2.	REVISED PER CITY COMMENTS	12/10/2014	CS
3.	REVISED PER CITY COMMENTS	03/17/2015	CS
4.	REVISED PER CITY COMMENTS	05/01/2015	CS
5.	REVISED PER CITY COMMENTS	09/03/2015	CS
6.	SITE PLAN SUBMISSION	10/31/2016	CS

Previous Editions Obsolete

APPLICANT/OWNER:
FRENCH-AMERICAN SCHOOL OF NEW YORK
525 FENIMORE ROAD
MAMARONECK, NY 10543

ARCHITECT:
STANTEC
400 MORGAN CENTER
101 EAST DIAMOND STREET
BUTLER, PA 16001-5923

JMC Planning, Engineering, Landscape Architecture & Land Surveying, PLLC
JMC Site Development Consultants, LLC
John Meyer Consulting, Inc.
120 BEDFORD ROAD • ARMONK, NY 10504
voice 914.273.5225 • fax 914.273.2102
www.jmcpllc.com

SANITARY SEWER AND WATER MAIN PROFILES

FRENCH-AMERICAN SCHOOL OF NEW YORK
336 RIDGEWAY
CITY OF WHITE PLAINS, NEW YORK

DRAWN:	CS
APPROVED:	RR
SCALE:	1" = 50'
DATE:	09/29/2014
PROJECT No:	10170
JMC 10170-UTILITIES	FILE PROFILE-SP
SCP:	--
DRAWING No:	SP-8

ANY ALTERATION OF PLANS, SPECIFICATIONS, PLATS AND REPORTS BEARING THE SEAL OF A LICENSED PROFESSIONAL ENGINEER OR LICENSED LAND SURVEYOR IS A VIOLATION OF SECTION 7209 OF THE NEW YORK STATE EDUCATION LAW, EXCEPT AS PROVIDED FOR BY SECTION 7209, SUBSECTION 2.

NOT FOR CONSTRUCTION

COPYRIGHT © 2014 by JMC. All rights reserved. No part of this document may be reproduced, stored in a retrieval system, or transmitted, in any form or by means, electronic, mechanical, photocopying, recording, or otherwise, without the prior written permission of JMC. Any unauthorized use of this document shall be at the user's sole risk and without liability to JMC. The unauthorized alteration of this document removes the seal of the professional. JMC shall not be held responsible for unauthorized use of this document.

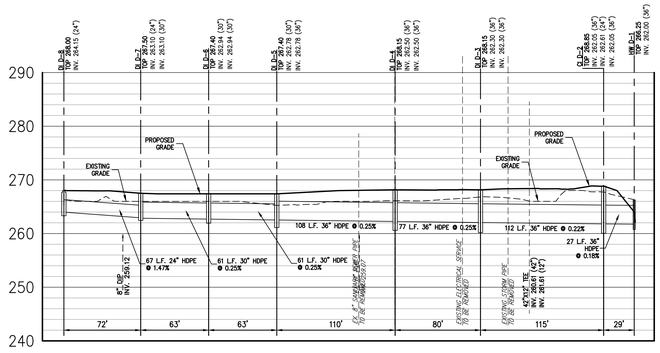

DI D-8 TO HW D-1

SCALE: VERT. 1" = 10'
HORZ. 1" = 50'

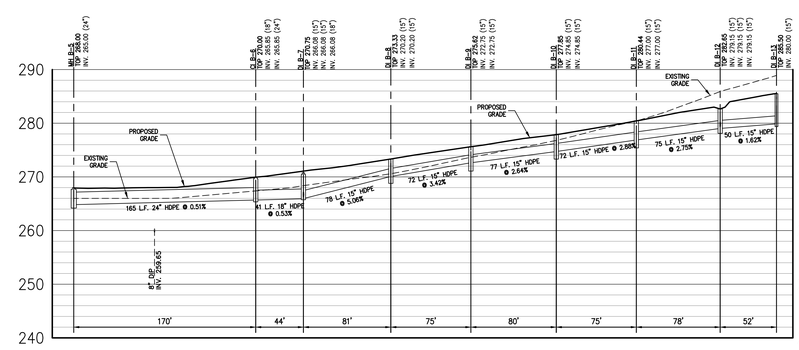

DI B-13 TO MH B-5

SCALE: VERT. 1" = 10'
HORZ. 1" = 50'

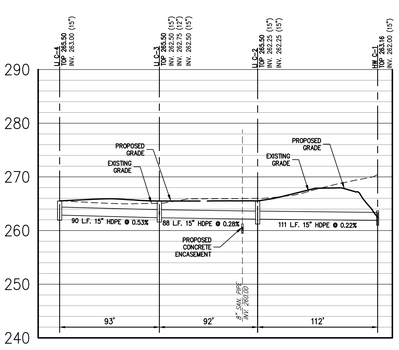

LI C-4 TO HW C-1

SCALE: VERT. 1" = 10'
HORZ. 1" = 50'

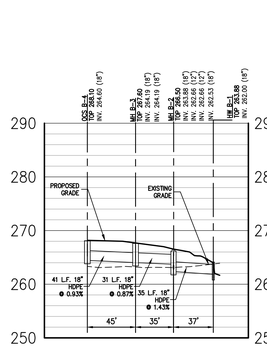

MH B-4 TO HW B-1

SCALE: VERT. 1" = 10'
HORZ. 1" = 50'

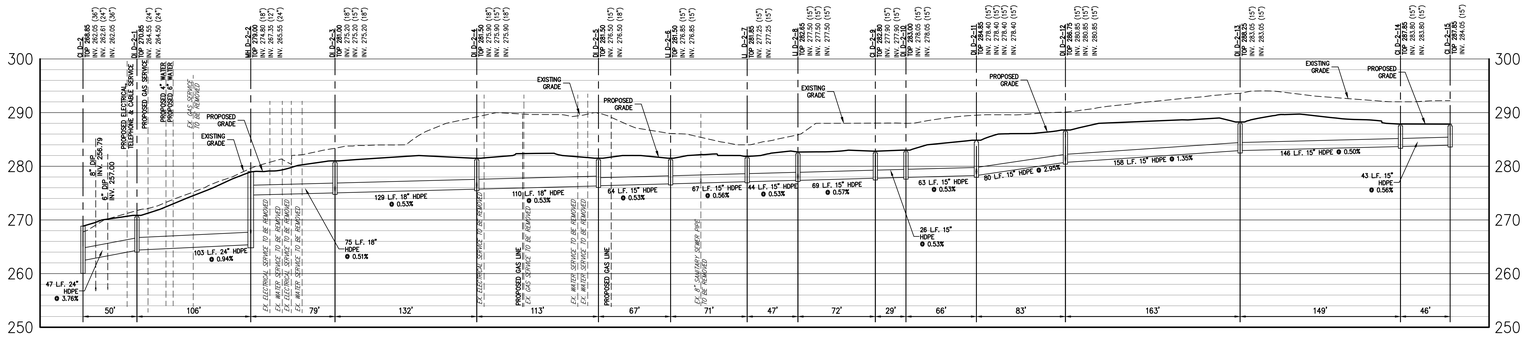

DI D-2-16 TO CI D-2

SCALE: VERT. 1" = 10'
HORZ. 1" = 50'

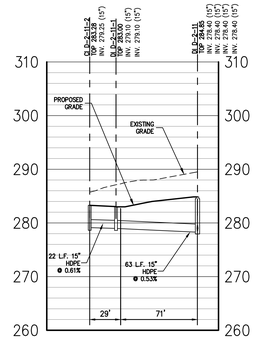

DI D-2-11-2 TO DI D-2-11

SCALE: VERT. 1" = 10'
HORZ. 1" = 50'

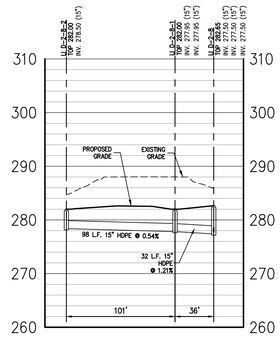

LI D-2-8-2 TO DI D-2-8

SCALE: VERT. 1" = 10'
HORZ. 1" = 50'

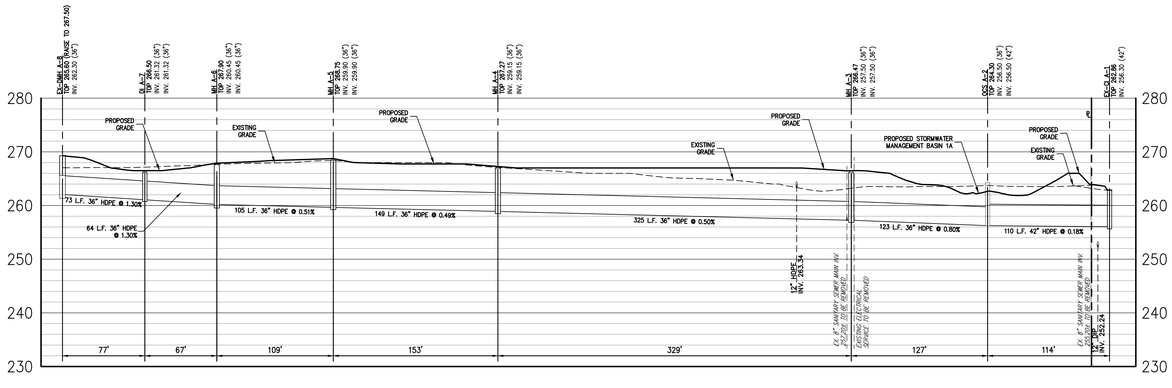

EX-DMH A-8 TO EX-CI A-1

SCALE: VERT. 1" = 10'
HORZ. 1" = 50'

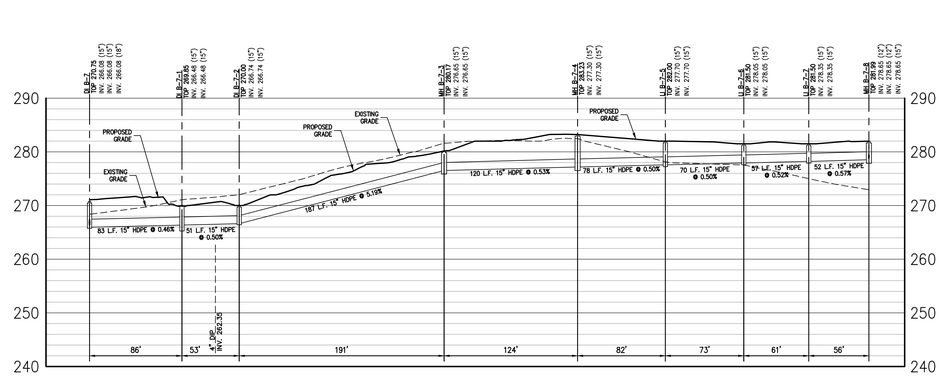

DI B-7-8 TO DI B-7

SCALE: VERT. 1" = 10'
HORZ. 1" = 50'

NO.	REVISION	DATE	BY
1.	REVISED PER CITY COMMENTS	10/20/2014	CS
2.	REVISED PER CITY COMMENTS	12/10/2014	CS
3.	REVISED PER CITY COMMENTS	03/17/2015	CS
4.	REVISED PER CITY COMMENTS	05/01/2015	CS
5.	REVISED PER CITY COMMENTS	09/01/2015	CS
6.	SITE PLAN SUBMISSION	10/31/2016	CS

Previous Editions Obsolete

APPLICANT/OWNER:
FRENCH-AMERICAN SCHOOL OF NEW YORK
525 FENIMORE ROAD
MAMARONECK, NY 10543

APPLICANT'S REPRESENTATIVE:
STANTEC
400 MORGAN CENTER
101 EAST DIAMOND STREET
BUTLER, PA 16001-5923

JMC Planning, Engineering, Landscape Architecture & Land Surveying, PLLC
JMC Site Development Consultants, LLC
John Meyer Consulting, Inc.
120 BEDFORD ROAD • ARMONK, NY 10504
voice 914.273.5225 • fax 914.273.2102
www.jmcpllc.com

STORM SEWER PROFILES

FRENCH-AMERICAN SCHOOL OF NEW YORK
336 RIDGEWAY
CITY OF WHITE PLAINS, NEW YORK

DRAWN:	CS
APPROVED:	RR
SCALE:	1" = 50'
DATE:	09/29/2014
PROJECT No:	10170
JMC: 10170-ENGR5	DWG: PROFILE-02-SP
SCR: ---	
DRAWING No:	SP-9

ANY ALTERATION OF PLANS, SPECIFICATIONS, PLATS AND REPORTS BEARING THE SEAL OF A LICENSED PROFESSIONAL ENGINEER OR LICENSED LAND SURVEYOR IS A VIOLATION OF SECTION 7209 OF THE NEW YORK STATE EDUCATION LAW, EXCEPT AS PROVIDED FOR BY SECTION 7209, SUBSECTION 2.

NOT FOR CONSTRUCTION

COPYRIGHT © 2014 by JMC: All rights Reserved. No part of this document may be reproduced, stored in a retrieval system, or transmitted in any form or by means, electronic, mechanical, photocopying, recording, or otherwise, without the prior written permission of JMC. Any unauthorized use of this document shall be at the sole risk of the user, and the user agrees to defend, indemnify and hold harmless JMC from any and all claims, losses, liabilities, damages, costs and expenses (including attorneys' fees) arising out of or in connection with such unauthorized use. This document is protected by the federal copyright act (17 USC) and is NOT to be altered or copied in any form or manner whatsoever without the written permission of JMC even when finished documents have been released.

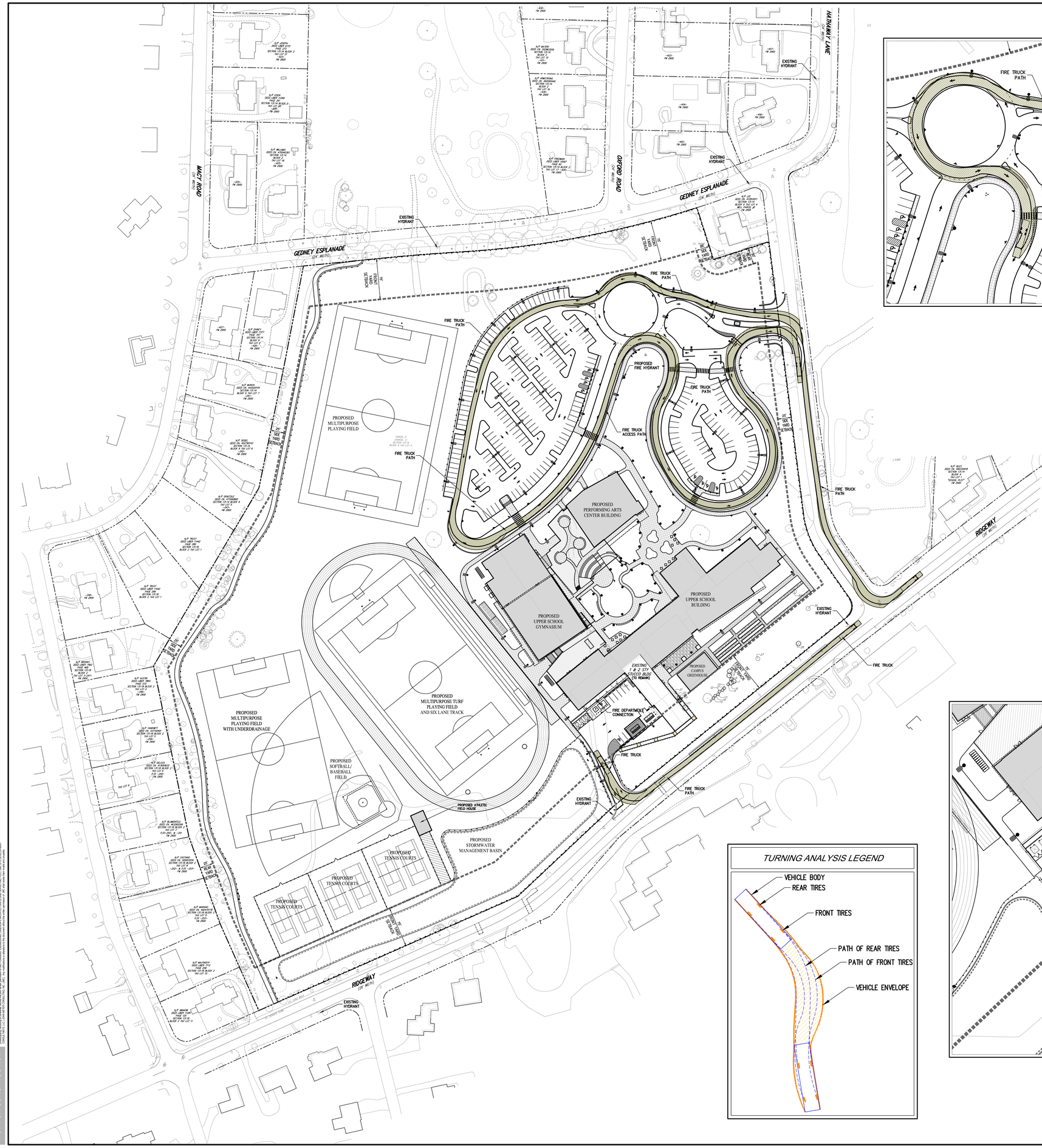

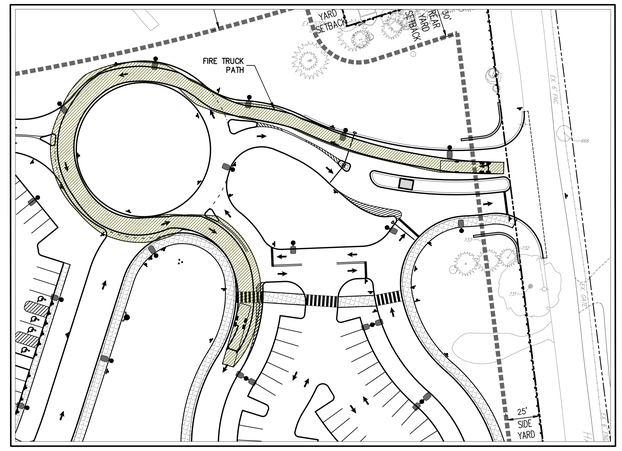

FIRE TRUCK
SCALE: 1" = 40'

LEGEND

- EXISTING PROPERTY LINE
- ADJACENT PROPERTY LINE
- EXISTING SETBACK LINE
- EXISTING WETLAND LINE AND DELINEATION
- EXISTING BUILDING OVERHANG
- EXISTING BUILDING LINE
- EXISTING PAVEMENT EDGE
- EXISTING CURB LINE
- EXISTING FENCE
- EXISTING TREE AND DESIGNATION
- EXISTING TREE LINE
- EXISTING PAINT
- EXISTING UTILITY POLE
- EXISTING LIGHT POLE
- EXISTING SIGN
- PROPOSED BUILDING LINE
- PROPOSED CONCRETE CURB
- PROPOSED DROP CURB & RAMP (DET XX)
- PROPOSED HANDICAPPED PARKING SPACES WITH NUMBER OF SPACES INDICATED
- PROPOSED PARKING SPACES WITH NUMBER OF SPACES INDICATED
- PROPOSED CONCRETE SIDEWALK
- PROPOSED MONOLITHIC CONCRETE SIDEWALK & CURB
- PROPOSED DROP CURB AND RAMP
- PROPOSED HEAVY DUTY PAVEMENT
- PROPOSED PERVIOUS PAVEMENT
- PROPOSED CONCRETE APRON
- PROPOSED RETAINING WALL (DESIGN BY OTHERS)
- PROPOSED FENCE
- PROPOSED DOUBLE ARM LIGHTING STANDARD (DESIGN BY OTHERS)
- PROPOSED SINGLE ARM LIGHTING STANDARD (DESIGN BY OTHERS)
- PROPOSED 2–4" WIDE YELLOW LINES 8"O.C.
- PROPOSED 1–4" WIDE WHITE LINE
- PROPOSED 12" WIDE WHITE STOP LINE
- PROPOSED 4" WIDE YELLOW HATCH LINES 18" O.C. @ 45°
- PROPOSED ARROW MARKING ON PAVEMENT
- TRAFFIC SIGN LOCATION & DESIGNATION
- PEDESTRIAN CROSSING

NOTES:

1. EXISTING CONDITIONS DEPICTED ON THIS PLAN HAVE BEEN TAKEN FROM SURVEY TITLED, "TOPOGRAPHIC AND UTILITIES SURVEY," PREPARED BY JOHN MEYER CONSULTING, P.C., DATED MARCH 13, 2015.

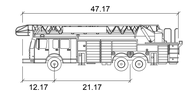

Fire Truck feet

Width	: 8.50
Track	: 8.50
Lock to Lock Time	: 6.0
Steering Angle	: 30.7

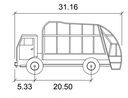

Garbage Truck feet

Width	: 8.25
Track	: 8.25
Lock to Lock Time	: 6.0
Steering Angle	: 36.3

TURNING ANALYSIS LEGEND

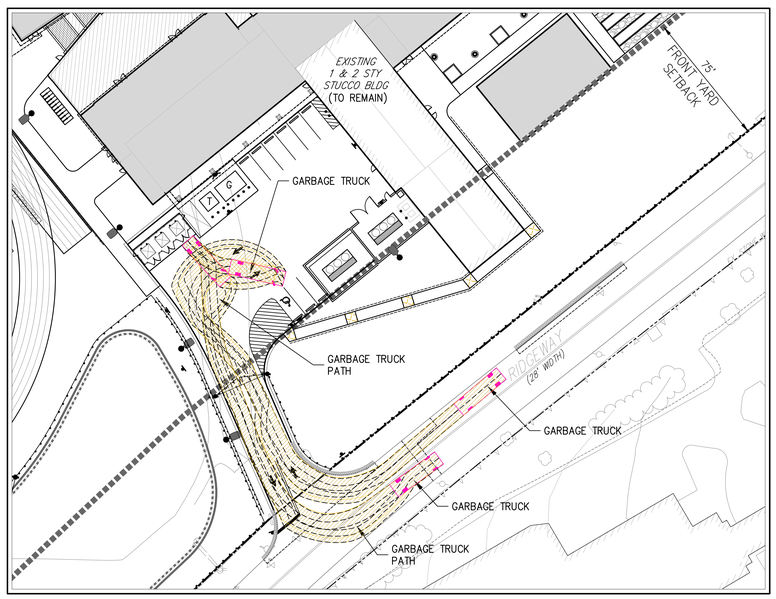

GARBAGE TRUCK
SCALE: 1" = 30'

ANY ALTERATION OF PLANS, SPECIFICATIONS, PLATS AND REPORTS BEARING THE SEAL OF A LICENSED PROFESSIONAL ENGINEER OR LICENSED LAND SURVEYOR IS A VIOLATION OF SECTION 7209 OF THE NEW YORK STATE EDUCATION LAW, EXCEPT AS PROVIDED FOR BY SECTION 7209, SUBSECTION 2.

NO.	REVISION	DATE	BY
1.	SITE PLAN SUBMISSION	05/19/2014	CS
2.	REVISED PER CITY COMMENTS	10/20/2014	CS
3.	REVISED PER CITY COMMENTS	12/10/2014	CS
4.	REVISED PER CITY COMMENTS	03/17/2015	CS
5.	REVISED PER CITY COMMENTS	04/15/2015	CS
6.	REVISED PER CITY COMMENTS	05/15/2015	CS
7.	SITE PLAN SUBMISSION	10/31/2016	CS

Previous Editions Obsolete

APPLICANT/OWNER:
FRENCH–AMERICAN SCHOOL OF NEW YORK
525 FENIMORE ROAD
MAMARONECK, NY 10543

ARCHITECT:
STANTEC
400 MORGAN CENTER
101 EAST DIAMOND STREET
BUTLER, PA 16001–5923

JMC Planning, Engineering, Landscape Architecture & Land Surveying, PLLC
JMC Site Development Consultants, LLC
John Meyer Consulting, Inc.
120 BEDFORD ROAD • ARMONK, NY 10504
voice 914.273.5225 • fax 914.273.2102
www.jmcpllc.com

FIRE ACCESS/GARBAGE TRUCK PLAN

FRENCH–AMERICAN SCHOOL OF NEW YORK
525 FENIMORE ROAD
CITY OF WHITE PLAINS, NEW YORK

DRAWN:	CS
APPROVED:	RR
SCALE:	1" = 60'
DATE:	09/29/2014
PROJECT No:	10170
DWG	SHT SP-10
SEMI-RE-ROOFRE-TRUCK OVERALL	--
DRAWING No:	SP–10

NOT FOR CONSTRUCTION
COPYRIGHT © 2015 by JMC - All Rights Reserved. No part of this document may be reproduced, stored in a retrieval system, or transmitted, in whole or in parts, electronic, mechanical, photocopy, recording, scanning or otherwise without the prior written permission of JMC. Unauthorized use of this document violates copyright laws and will be subject to legal prosecution.

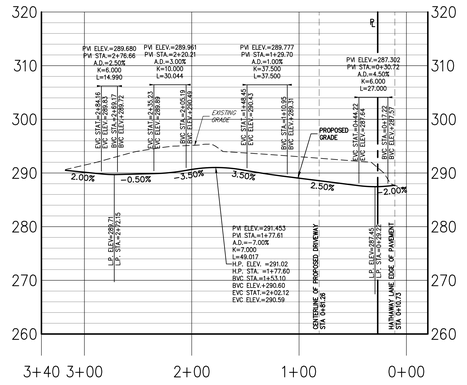

MAIN ROADWAY A–A

SCALE: HORIZ. 1" = 50'
VERT. 1" = 10'

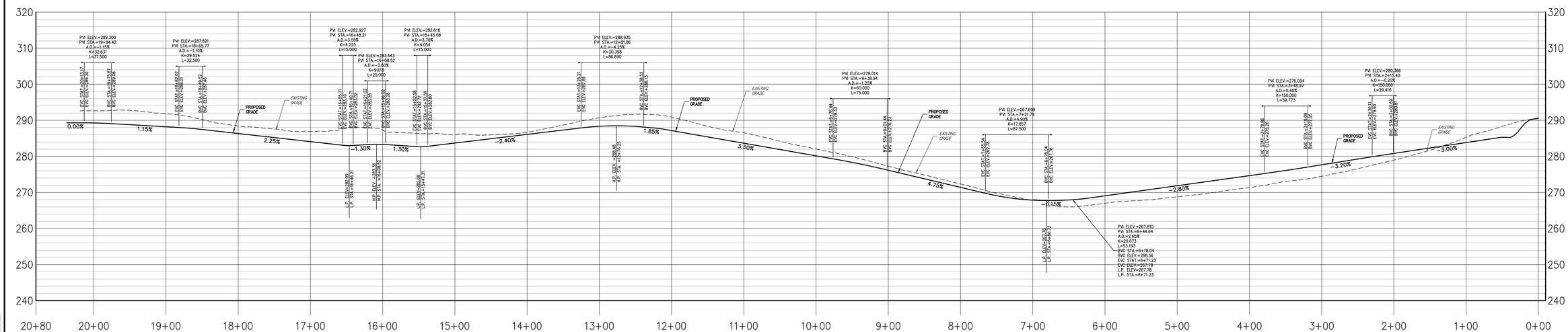

MAIN ROADWAY B–B

SCALE: HORIZ. 1" = 50'
VERT. 1" = 10'

NOT FOR CONSTRUCTION

COPYRIGHT © 2014 by JMC All Rights Reserved. No part of this document may be reproduced, stored in a retrieval system, or transmitted in any form or by means, electronic, mechanical, photocopying, recording, or otherwise, without the prior written permission of JMC. Unauthorized use of this document violates applicable laws, including copyright laws, and is prohibited. DISCLAIMER: USE OF UNAUTHORIZED COPIES MAY RESULT IN LEGAL ACTION. The unauthorized user agrees to indemnify JMC against any damages, costs or expenses that may arise from unauthorized use.

NO.	REVISION	DATE	BY
1.	SITE PLAN SUBMISSION	05/19/2014	CS
2.	REVISED PER CITY COMMENTS	10/20/2014	CS
3.	REVISED PER CITY COMMENTS	12/10/2014	CS
4.	REVISED PER CITY COMMENTS	03/17/2015	CS
5.	REVISED PER CITY COMMENTS	04/01/2015	CS
6.	REVISED PER CITY COMMENTS	05/15/2015	CS
7.	SITE PLAN SUBMISSION	10/31/2016	CS

Previous Editions Obsolete

APPLICANT/OWNER:
FRENCH–AMERICAN SCHOOL OF NEW YORK
525 FENIMORE ROAD
MAMARONECK, NY 10543

ARCHITECT:
STANTEC
400 MORGAN CENTER
101 EAST DIAMOND STREET
BUTLER, PA 16001–5923

JMC Planning, Engineering, Landscape Architecture & Land Surveying, PLLC
JMC Site Development Consultants, LLC
John Meyer Consulting, Inc.
120 BEDFORD ROAD • ARMONK, NY 10504
voice 914.273.5225 • fax 914.273.2102
www.jmcpllc.com

ROAD PROFILES

FRENCH–AMERICAN SCHOOL OF NEW YORK
255 RIDGEWAY
CITY OF WHITE PLAINS, NEW YORK

ANY ALTERATION OF PLANS, SPECIFICATIONS, PLATS AND REPORTS BEARING THE SEAL OF A LICENSED PROFESSIONAL ENGINEER OR LICENSED LAND SURVEYOR IS A VIOLATION OF SECTION 7209 OF THE NEW YORK STATE EDUCATION LAW, EXCEPT AS PROVIDED FOR BY SECTION 7209, SUBSECTION 2.

DRAWN: CS	APPROVED: RR
SCALE: 1" = 50'	
DATE: 05/05/2014	
PROJECT No: 10170	
DWG: 10170-ID-ROR	FILE: DRIVEWAYS
SCR: --	
DRAWING No: SP–11	

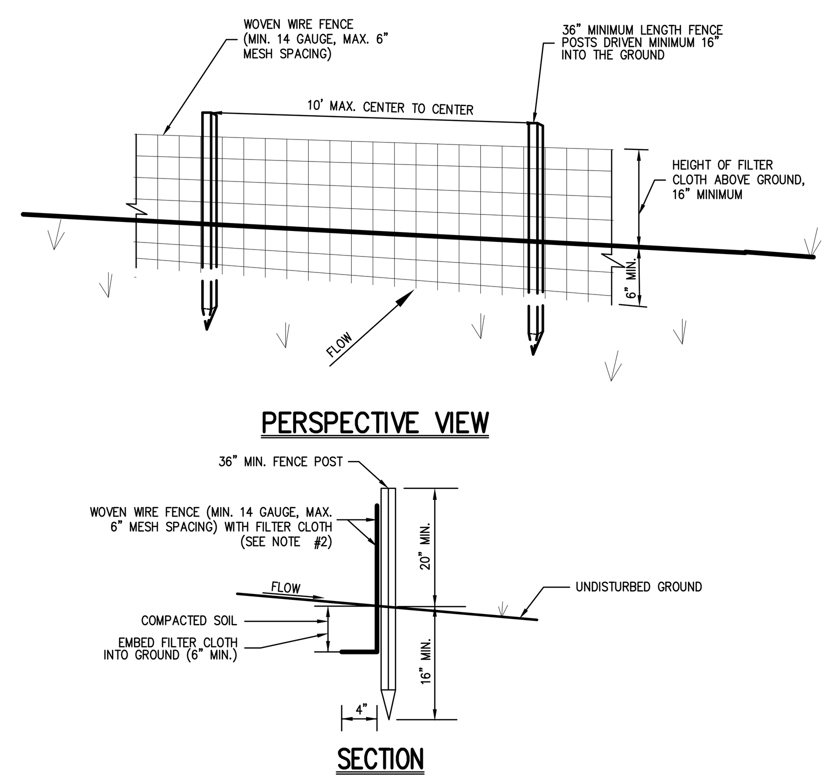

NOTES:

1. WOVEN WIRE FENCE SHALL BE FASTENED SECURELY TO FENCE POSTS WITH WIRE TIES OR STAPLES. POSTS SHALL BE STEEL, EITHER T OR U TYPE OR HARDWOOD.
2. FILTER CLOTH SHALL BE FASTENED SECURELY TO WOVEN WIRE FENCE WITH TIES SPACED EVERY 24" AT TOP AND MID SECTION. FENCE SHALL BE WOVEN WIRE, 6" MAXIMUM MESH OPENING.
3. WHEN TWO SECTIONS OF FILTER CLOTH ADJOIN EACH OTHER, THEY SHALL BE OVERLAPPED BY SIX INCHES AND FOLDED. FILTER CLOTH SHALL BE EITHER FILTER X, MIRAFI 100X, STABLINKA T140N, OR APPROVED EQUAL.
4. PREFABRICATED UNITS SHALL BE GEOFAB, ENVIROFENCE, OR APPROVED EQUAL.
5. MAINTENANCE SHALL BE PERFORMED AS NEEDED AND MATERIAL REMOVED AND REPLACED WHEN "BULGES" DEVELOP IN THE SILT FENCE.

SILT FENCE 01

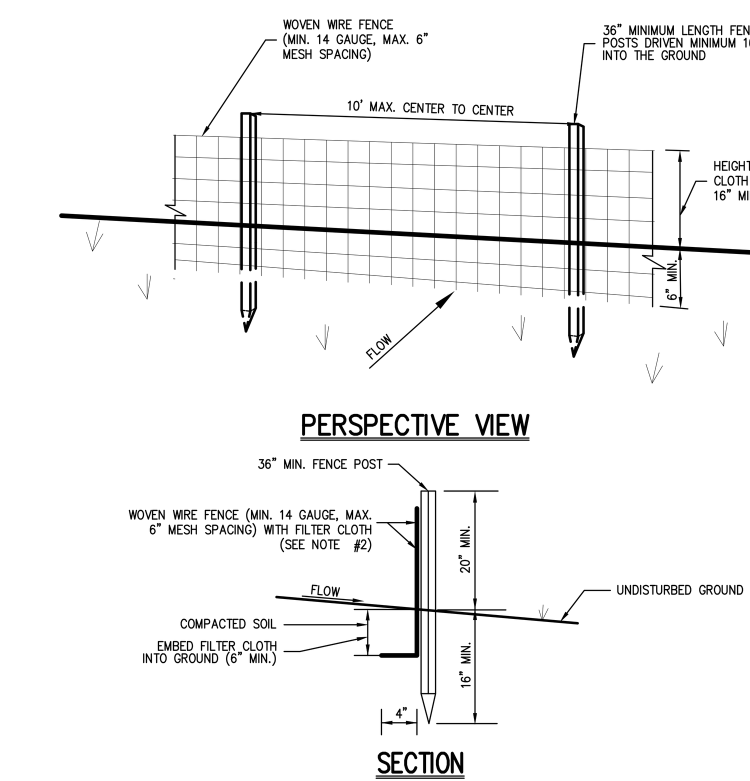

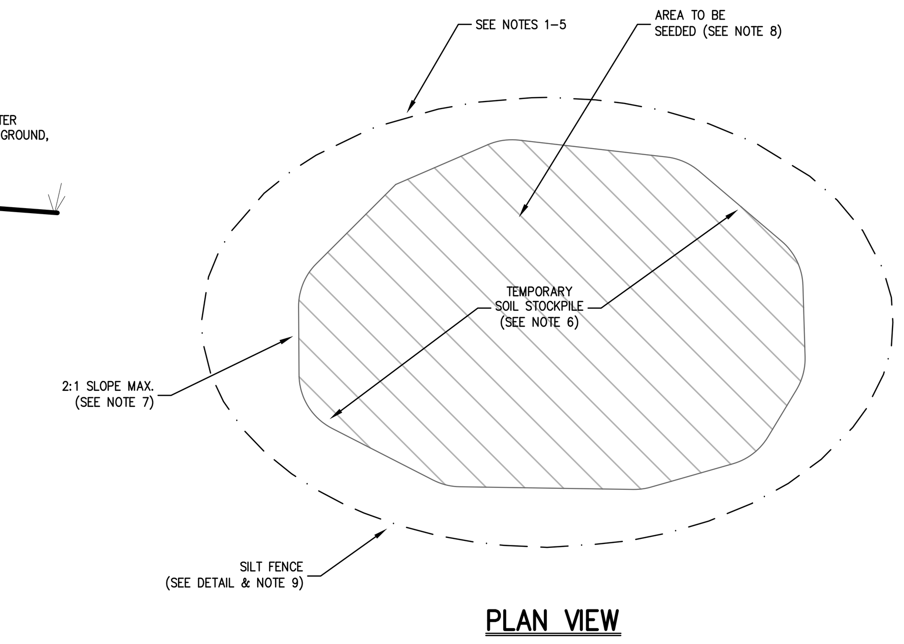

NOTES:

1. WOVEN WIRE FENCE SHALL BE FASTENED SECURELY TO FENCE POSTS WITH WIRE TIES OR STAPLES. POSTS SHALL BE STEEL, EITHER T OR U TYPE OR HARDWOOD.
2. FILTER CLOTH SHALL BE FASTENED SECURELY TO WOVEN WIRE FENCE WITH TIES SPACED EVERY 24" AT TOP AND MID SECTION. FENCE SHALL BE WOVEN WIRE, 6" MAXIMUM MESH OPENING.
3. WHEN TWO SECTIONS OF FILTER CLOTH ADJOIN EACH OTHER, THEY SHALL BE OVERLAPPED BY SIX INCHES AND FOLDED. FILTER CLOTH SHALL BE EITHER FILTER X, MIRAFI 100X, STABLINKA T140N, OR APPROVED EQUAL.
4. PREFABRICATED UNITS SHALL BE GEOFAB, ENVIROFENCE, OR APPROVED EQUAL.
5. MAINTENANCE SHALL BE PERFORMED AS NEEDED AND MATERIAL REMOVED AND REPLACED WHEN "BULGES" DEVELOP IN THE SILT FENCE.
6. THE AREA CHOSEN FOR ALL TEMPORARY SOIL STOCKPILES SHALL BE DRY AND STABLE.
7. ALL STOCKPILED SOIL SHALL NOT CONTAIN SLOPES GREATER THAN 2:1.
8. UPON COMPLETION OF SOIL STOCKPILING, EACH PILE SHALL BE SEEDED WITHIN 24 HOURS. PERENNIAL OR ANNUAL RYEGRASS SHALL BE PLANTED DURING SPRING, SUMMER OR EARLY FALL. WINTER RYE (CEREAL RYE) SHALL BE PLANTED DURING LATE FALL OR EARLY WINTER.
9. ALL STOCKPILES SHALL BE PROTECTED WITH SILT FENCING INSTALLED AROUND THE PERIMETER.

TEMPORARY SOIL STOCKPILE WITH SILT FENCE 02

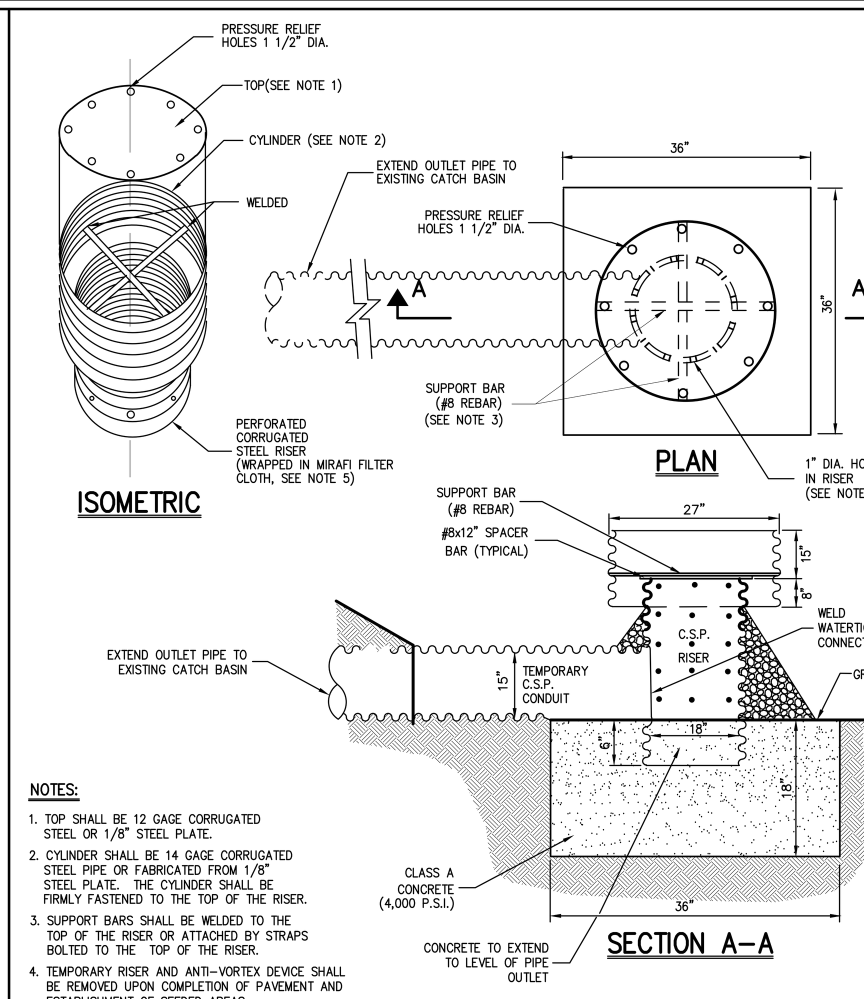

NOTES:

1. TOP SHALL BE 12 GAGE CORRUGATED STEEL OR 1/8" STEEL PLATE.
2. CYLINDER SHALL BE 14 GAGE CORRUGATED STEEL PIPE OR FABRICATED FROM 1/8" STEEL PLATE. THE CYLINDER SHALL BE FIRMLY FASTENED TO THE TOP OF THE RISER.
3. SUPPORT BARS SHALL BE WELDED TO THE TOP OF THE RISER OR ATTACHED BY STRAPS BOLTED TO THE TOP OF THE RISER.
4. TEMPORARY RISER AND ANTI–VORTEX DEVICE SHALL BE REMOVED UPON COMPLETION OF PAVEMENT AND ESTABLISHMENT OF SEEDED AREAS.
5. RISER TO BE PERFORATED WITH 1" HOLES SPACED 12" HORIZ. AND VERT. AND LOCATED IN CONCAVE PORTION OF CORRUGATIONS. PERFORATIONS SHALL NOT EXTEND BELOW INVERT ELEVATIONS OF OUTLET PIPE. WRAP RISER IN MIRAFI FILTER CLOTH OR APPROVED EQUAL AND SURROUND RISER WITH 1 1/2"–2" SIZE CRUSHED STONE.

TEMPORARY RISER & ANTI–VORTEX DEVICE 03
(SEDIMENT BASIN 1A)

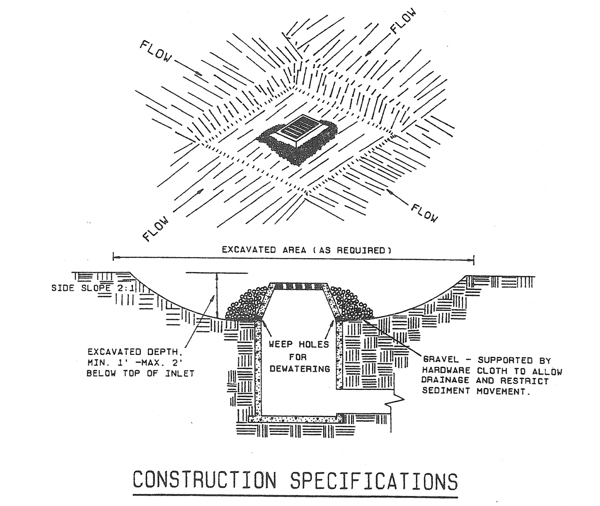

NOTES:

1. CLEAR THE AREA OF ALL DEBRIS THAT WILL HINDER EXCAVATION.
2. GRADE APPROACH TO THE INLET UNIFORMLY AROUND THE BASIN.
3. WEEP HOLES SHALL BE PROCTECTED BY/STONE.
4. PROVIDE FREQUENT INSPECTION AND MAINTENANCE. REMOVE ACCUMULATED SEDIMENT AND REPAIR OR REPLACE INLET PROTECTION TO MAINTAIN EFFECTIVENESS OF THE INSTALLATION.
5. UPON STABILIZATION OF CONTRIBUTING DRAINAGE AREA. SEAL WEEP HOLES FILL BASIN WITH STABLE SOIL TO FINAL GRADE. COMPACT IT PROPERLY AND STABILIZE WITH PERMANET SEEDING.

EXCAVATED DROP INLET PROTECTION 04

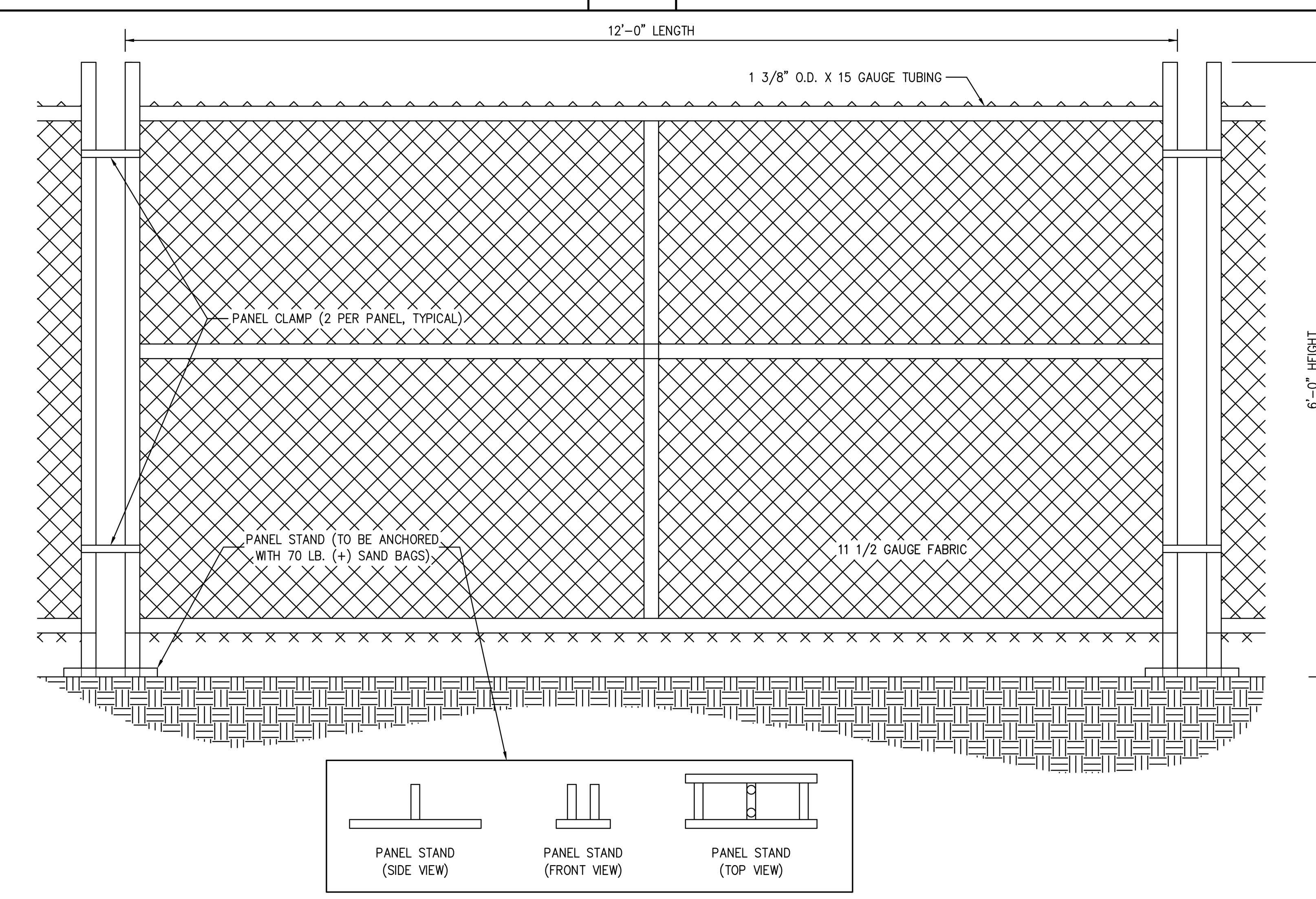

CHAIN LINK CONSTRUCTION FENCE 05
(NATIONAL RENT-A-FENCE)

NOTES:

1. FILTER FABRIC SHALL HAVE AN EOS OF 40–85.
2. WOODEN FRAME SHALL BE CONSTRUCTED OF 2" X 4" CONSTRUCTION GRADE LUMBER.
3. WIRE MESH ACROSS THROAT SHALL BE A CONTINUOUS PIECE 30" MINIMUM WIDTH WITH A LENGTH 4' LONGER THAN THE THROAT. IT SHALL BE SHAPED AND SECURELY NAILED TO A 2" X 4" WEIR.
4. THE ASSEMBLY SHALL BE PLACED AGAINST THE INLET AND SECURED BY 2" X 4" ANCHORS 2' LONG EXTENDING ACROSS THE TOP OF THE INLET AND HELD IN PLACE BY SANDBAGS OR ALTERNATE WEIGHTS.
5. INLET PROTECTION SHALL BE INSPECTED FREQUENTLY, MAINTAINED, REPAIRED OR REPLACED TO MAINTAIN EFFECTIVENESS OF INSTALLATION.
6. INLET PROTECTION SHALL BE REMOVED WHEN DIRECTED BY THE OWNER'S FIELD REPRESENTATIVE.
7. IF A SIDEWALK EXISTS, THE CONTRACTOR SHALL PROVIDE PROTECTIVE FENCING (SEE DETAIL) TO PROTECT THE PUBLIC.
8. THE WEIR SHALL BE SECURELY NAILED TO 2" X 4" SPACERS 9 INCHES LONG SPACED NO MORE THAN 6 FEET APART.

MAXIMUM DRAINAGE AREA 1 ACRE

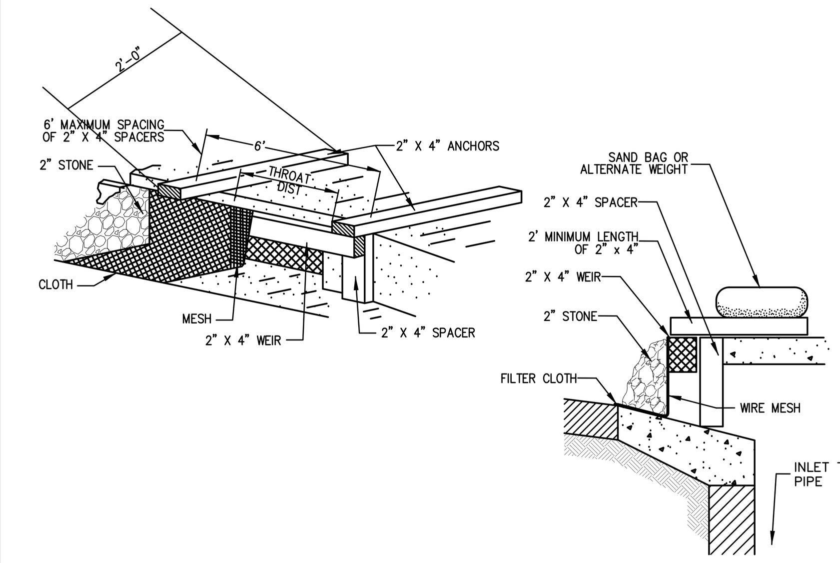

CURB DROP INLET PROTECTION STRUCTURE 06

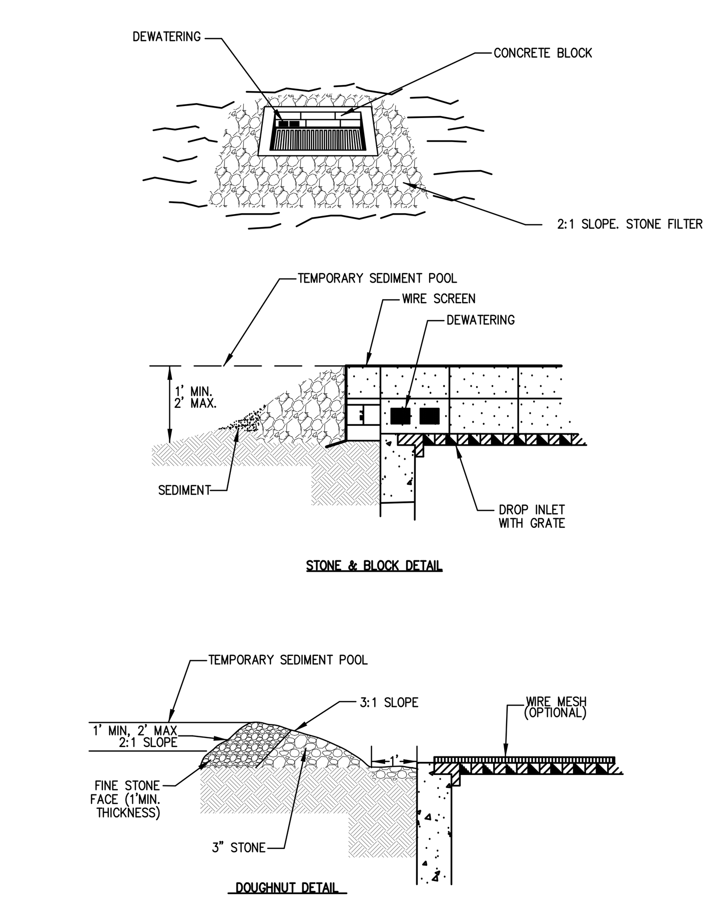

NOTES:

1. LAY ONE BLOCK ON EACH SIDE OF THE STRUCTURE ON ITS SIDE FOR DEWATERING. FOUNDATION SHALL BE 2 INCHES MINIMUM BELOW REST OF INLET AND BLOCKS SHALL BE PLACED AGAINST INLET FOR SUPPORT.
2. HARDWARE CLOTH OR 1/2" WIRE MESH SHALL BE PLACED OVER BLOCK OPENINGS TO SUPPORT STONE.
3. USE CLEAN STONE 1/2" TO 3/4" IN DIAMETER PLACED 2" BELOW THE TOP OF THE BLOCK ON A 2:1 SLOPE OR FLATTER.
4. FOR STONE STRUCTURES ONLY. A 1 FOOT THICK LAYER OF THE FILTER STONE WILL BE PLACED AGAINST THE 3" STONE AS SHOWN ON THE DRAWINGS.

STONE & BLOCK DROP INLET PROTECTION 07

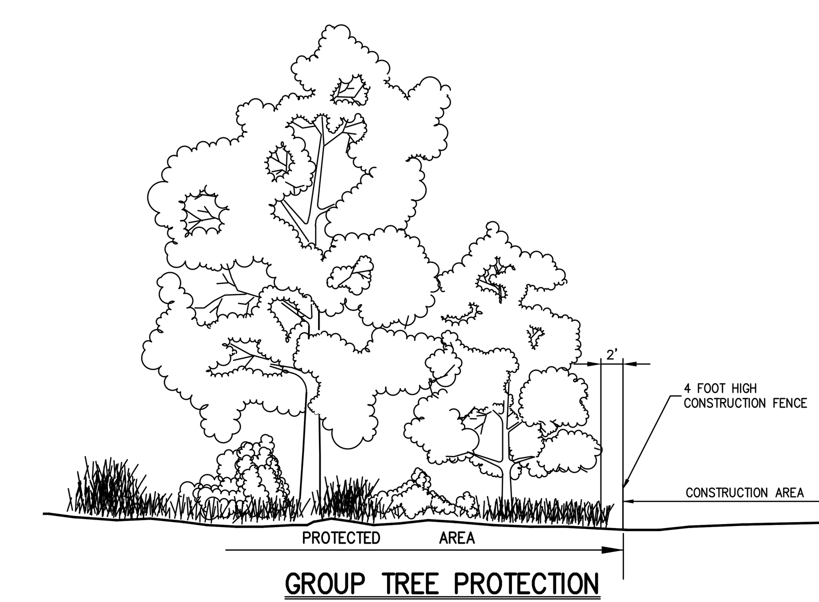

ANY ALTERATION OF PLANS, SPECIFICATIONS, PLATS AND REPORTS BEARING THE SEAL OF A LICENSED PROFESSIONAL ENGINEER OR LICENSED LAND SURVEYOR IS A VIOLATION OF SECTION 7209 OF THE NEW YORK STATE EDUCATION LAW, EXCEPT AS PROVIDED FOR BY SECTION 7209, SUBSECTION 2.

TREE PROTECTION 08

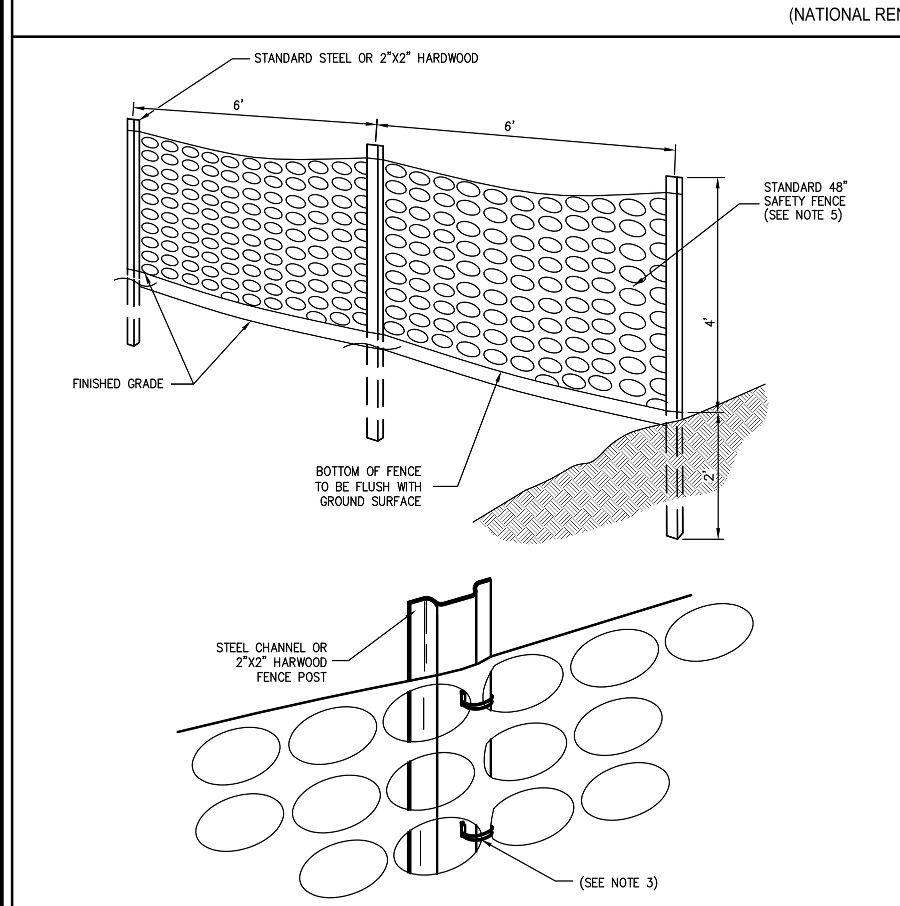

NOTES:

1. SPACE SUPPORT FENCE POSTS AT 6 FOOT INTERVALS.
2. DRIVE SUPPORT POSTS 2 FEET INTO GROUND.
3. FIRMLY FASTEN FENCE MATERIAL IN PLACE BY WIRING TO FENCE POST WHILE MAINTAINING TENSION ACROSS FULL HEIGHT OF FENCE. WIRING SHALL BE DONE IN A MANNER THAT WILL PREVENT SAGGING OF FENCE MATERIAL.
4. PROVIDE PERIODIC INSPECTION AND MAINTENANCE OF FENCE INCLUDING REPAIRS AS NECESSARY AND REQUIRED.
5. PLASTIC FENCE SHALL BE INTERNATIONAL ORANGE COLOR, AS MANUFACTURED BY ADPI ENTERPRISES, INC. OR APPROVED EQUAL.
6. REMOVE CONSTRUCTION FENCE AS DIRECTED BY THE OWNER'S FIELD REPRESENTATIVE.

CONSTRUCTION FENCE 09

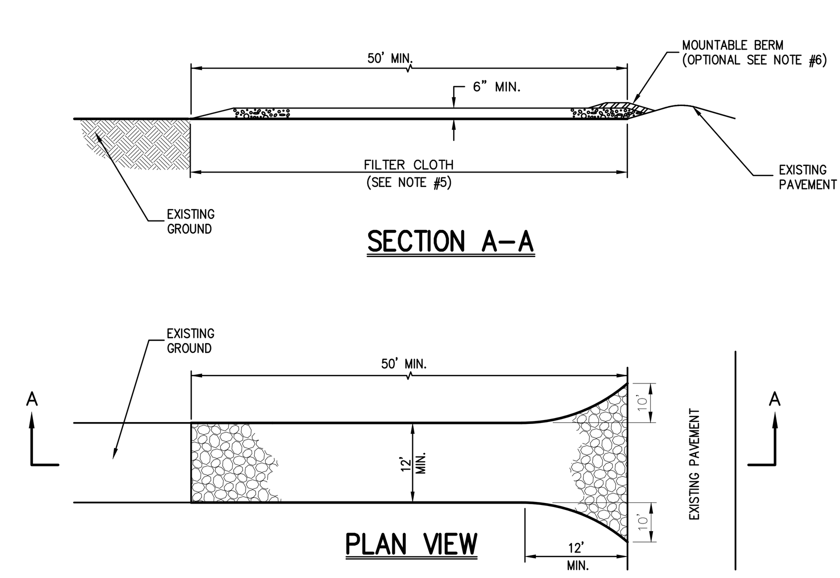

NOTES

1. STONE SIZE – USE 1" TO 4" STONE, OR RECLAIMED OR RECYCLED CONCRETE EQUIVALENT.
2. LENGTH – AS REQUIRED, BUT NOT LESS THAN 50 FEET.
3. THICKNESS – NOT LESS THAN SIX (6) INCHES.
4. WIDTH – 12 FOOT MINIMUM, BUT NOT LESS THAN THE FULL WIDTH AT POINTS WHERE INGRESS OR EGRESS OCCURS. 24 FOOT MINIMUM IF SINGLE ENTRANCE TO SITE.
5. FILTER CLOTH TO BE PLACED OVER THE ENTIRE WIDTH AND LENGTH OF AREA PRIOR TO PLACING OF STONE.
6. SURFACE WATER – ALL SURFACE WATER FLOWING OR DIVERTED TOWARD CONSTRUCTION ENTRANCES SHALL BE PIPED BENEATH THE ENTRANCE. IF PIPING IS IMPRACTICAL, A MOUNTABLE BERM WITH 5:1 SLOPES WILL BE PERMITTED.
7. MAINTENANCE – THE ENTRANCE SHALL BE MAINTAINED IN A CONDITION WHICH WILL PREVENT TRACKING OR FLOWING OF SEDIMENT ONTO PUBLIC RIGHTS–OF–WAY. THIS MAY REQUIRE PERIODIC TOP DRESSING WITH ADDITIONAL STONE AS CONDITIONS DEMAND AND REPAIR AND/OR CLEANOUT OF ANY MEASURE USED TO TRAP SEDIMENT. ALL SEDIMENT SPILLED, DROPPED, WASHED OR TRACKED ONTO PUBLIC RIGHTS–OF–WAY MUST BE REMOVED IMMEDIATELY.
8. WASHING – WHEELS SHALL BE CLEANED TO REMOVE SEDIMENT PRIOR TO ENTRANCE ONTO PUBLIC RIGHTS–OF–WAY. WHEN WASHING IS REQUIRED, IT SHALL BE DONE ON AN AREA STABILIZED WITH STONE AND WHICH DRAINS INTO AN APPROVED SEDIMENT TRAPPING DEVICE.
9. PERIODIC INSPECTION AND NEEDED MAINTENANCE SHALL BE PROVIDED AFTER EACH RAIN.

STABILIZED CONSTRUCTION ENTRANCE 10

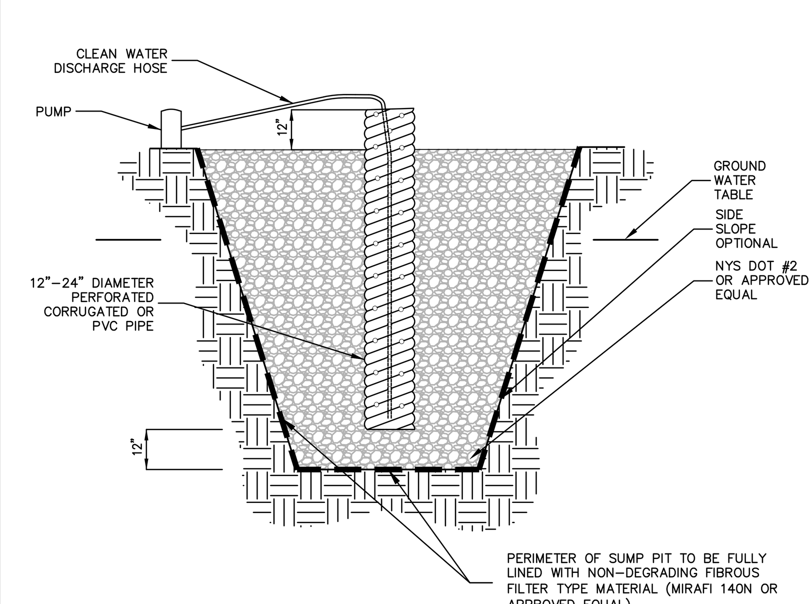

CONSTRUCTION SPECIFICATIONS:

1. PIT DIMENSIONS ARE OPTIONAL
2. THE STANDPIPE SHOULD BE CONSTRUCTED BY PERFORATING A 12–INCH TO 24–INCH DIAMETER CORRUGATED OR PVC PIPE.
3. A BASE OF 2–INCH AGGREGATE SHOULD BE PLACED IN THE PIT TO A DEPTH OF 12 INCHES. AFTER INSTALLING THE STANDPIPE, THE PIT SURROUNDING THE STANDPIPE SHOULD BE BACKFILLED WITH 2–INCH AGGREGATE
4. THE STANDPIPE SHOULD EXTEND 12 TO 18 INCHES ABOVE THE LIP OF THE PIT
5. IF THE DISCHARGE WILL BE PUMPED DIRECTLY TO A STORM DRAINAGE SYSTEM, THE STANDPIPE SHOULD BE WRAPPED WITH FILTERCLOTH BEFORE INSTALLATION. IF DESIRED, 1/4 INCH – 1/2 INCH HARDWARE CLOTH MAY BE PLACED AROUND THE STANDPIPE PRIOR TO ATTACHING THE FILTERCLOTH.

SUMP PIT FOR DEWATERING 11

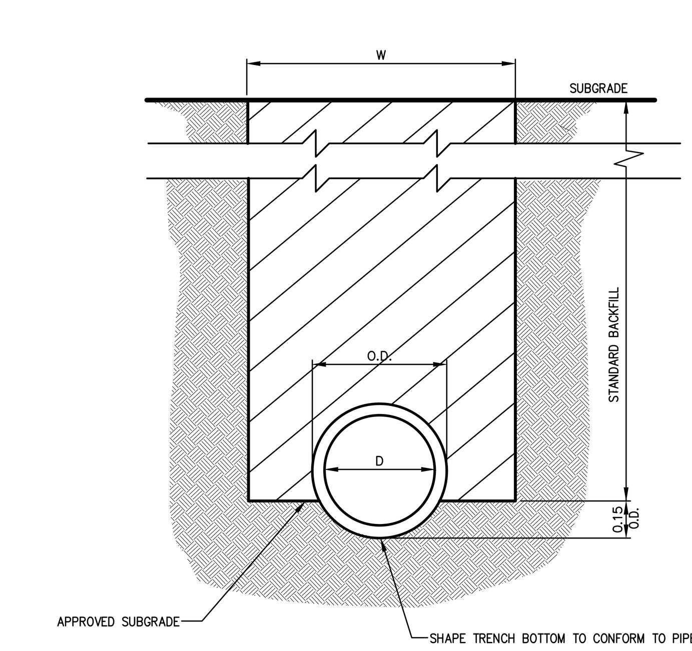

D=INSIDE DIAMETER, SPAN, OR RISE
O.D.=OUTSIDE BARREL DIAMETER, SPAN OR RISE
H.D.=OUTSIDE DIAMETER, SPAN, OR RISE @ BELL OR BAND
W=H.D. + 2.0' – FOR 48" OR SMALLER DIAMETER, SPAN, OR RISE
W=H.D. + 2.5' – FOR GREATER THAN 48" DIAMETER, SPAN, OR RISE

NOTES:

1. IN FILL AREAS, EMBANKMENTS SHALL BE CONSTRUCTED TO A MAXIMUM OF 2 FEET ABOVE TOP OF PIPE BEFORE EXCAVATING TRENCH.
2. FOR CORRUGATED POLYETHYLENE DRAIN PIPE (CPDP) INSTALLATION AND POLYVINYL CHLORIDE (PVC) PIPE AND CONDUIT INSTALLATION, USE TYPE II TRENCH.
3. BACKFILL FOR PIPE SHALL BE PLACED EVENLY AND CAREFULLY AROUND AND OVER THE PIPE OR CONDUIT IN SIX (6) INCH MAXIMUM LAYERS. EACH LAYER SHALL BE THOROUGHLY AND CAREFULLY COMPACTED UNTIL TWELVE (12) INCHES OF COVER EXISTS OVER THE PIPE OR CONDUIT. THE REMAINDER OF THE BACKFILL MAY THEN BE PLACED AND COMPACTED IN A MAXIMUM OF TWELVE (12) INCH LAYERS. EACH LAYER SHALL BE COMPACTED BY APPROVED MECHANICAL TAMPING MACHINES. UNLESS OTHERWISE SPECIFIED BACKFILL SHALL BE COMPACTED TO NOT LESS THAN 92% MAXIMUM MODIFIED DENSITY IN ACCORDANCE WITH ASTM DESIGNATION D–1557 IN THE MANNER HEREIN DESCRIBED. BACKFILL SHALL PROCEED UP TO THE LINES AND GRADES AS SHOWN ON THE DRAWINGS.

TYPE I TRENCH 12
(SHAPED BOTTOM)

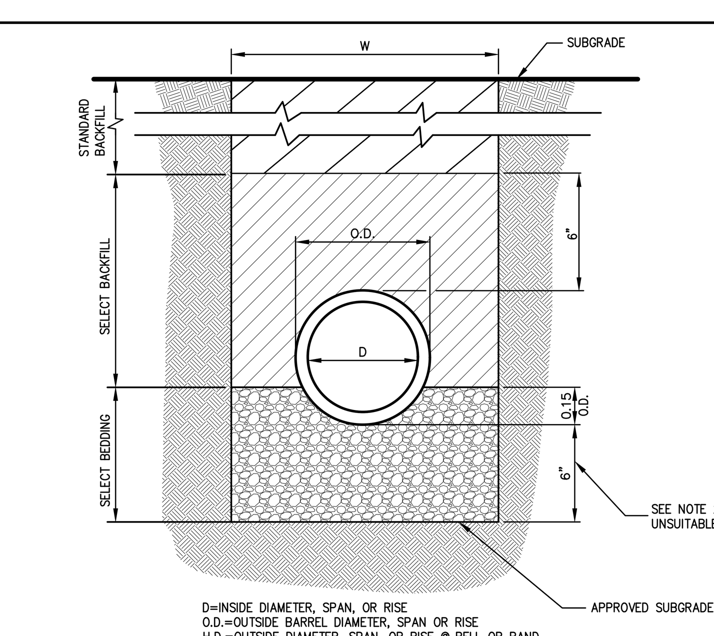

D=INSIDE DIAMETER, SPAN, OR RISE
O.D.=OUTSIDE BARREL DIAMETER, SPAN OR RISE
H.D.=OUTSIDE DIAMETER, SPAN, OR RISE @ BELL OR BAND
W=H.D. + 2.0' – FOR 48" OR SMALLER DIAMETER, SPAN, OR RISE
W=H.D. + 2.5' – FOR GREATER THAN 48" DIAMETER, SPAN, OR RISE

NOTES:

1. FOR TYPE II TRENCH, MATERIAL FOR SELECT BEDDING AND SELECT BACKFILL SHALL BE:
   A. EITHER SAND OR CRUSHED STONE IF NO WATER IS ENCOUNTERED IN TRENCH.
   B. 3/4"CRUSHED STONE IF WATER IS ENCOUNTERED IN TRENCH.
2. TYPE II TRENCH SHALL BE USED IN ALL OF THE FOLLOWING CASES:
   A. FOR ALL CORRUGATED POLYETHYLENE DRAIN PIPE (CPDP) AND PVC PIPE AND CONDUIT INSTALLATION.
   B. WHEN ROCK OR HARDPAN IS ENCOUNTERED IN BOTTOM OF TRENCH.
   C. WHEN UNSUITABLE MATERIAL IS ENCOUNTERED IN BOTTOM OF TRENCH. IN SUCH CASE DEPTH OF UNDERCUTTING SHALL BE AS DIRECTED BY THE ENGINEER WITH 6" MINIMUM.
3. FOR ALL TRENCH EXCAVATION IN FILL AREAS, ALL EMBANKMENTS SHALL BE CONSTRUCTED TO A MINIMUM OF 2 FEET ABOVE THE OUTSIDE TOP (AT THE BELL) OF THE PIPE PRIOR TO BEGINNING ANY TRENCH EXCAVATION.
4. BACKFILL FOR PIPE AND CONDUIT SHALL BE PLACED EVENLY AND CAREFULLY AROUND AND OVER THE PIPE OR CONDUIT IN SIX (6) INCH MAXIMUM LAYERS. EACH LAYER SHALL BE THOROUGHLY AND CAREFULLY COMPACTED UNTIL TWELVE (12) INCHES OF COVER EXISTS OVER THE PIPE OR CONDUIT. THE REMAINDER OF THE BACKFILL MAY THEN BE PLACED AND COMPACTED IN A MAXIMUM OF TWELVE (12) INCH LAYERS. EACH LAYER SHALL BE COMPACTED BY APPROVED MECHANICAL TAMPING MACHINES. UNLESS OTHERWISE SPECIFIED BACKFILL SHALL BE COMPACTED TO NOT LESS THAN 92% MAXIMUM MODIFIED DENSITY IN ACCORDANCE WITH ASTM DESIGNATION D–1557 IN THE MANNER HEREIN DESCRIBED. BACKFILL SHALL PROCEED UP TO THE LINES AND GRADES AS SHOWN ON THE DRAWINGS.

TYPE II TRENCH 13

NO.	REVISION	DATE	BY
1.	SITE PLAN SUBMISSION	05/19/2014	CS
2.	REVISED PER CITY COMMENTS	10/20/2014	CS
3.	REVISED PER CITY COMMENTS	12/10/2014	CS
4.	REVISED PER CITY COMMENTS	03/17/2015	CS
5.	REVISED PER CITY COMMENTS	05/01/2015	CS
6.	REVISED PER CITY COMMENTS	05/15/2015	CS
7.	SITE PLAN SUBMISSION	10/31/2016	CS

Previous Editions Obsolete

APPLICANT/OWNER:
FRENCH–AMERICAN SCHOOL OF NEW YORK
525 FENIMORE ROAD
MAMARONECK, NY 10543

ARCHITECT:
STANTEC
400 MORGAN CENTER
101 EAST DIAMOND STREET
BUTLER, PA 16001–5923

JMC Planning, Engineering, Landscape Architecture & Land Surveying, PLLC
JMC Site Development Consultants, LLC
John Meyer Consulting, Inc.
120 BEDFORD ROAD • ARMONK, NY 10504
voice 914.273.5225 • fax 914.273.2102
www.jmcpllc.com

CONSTRUCTION DETAILS

FRENCH–AMERICAN SCHOOL OF NEW YORK
336 RIDGEWAY
CITY OF WHITE PLAINS, NEW YORK

DRAWN: CS	APPROVED: RR		
SCALE: N.T.S.			
DATE: 09/29/2014			
PROJECT No: 10170			
DWG: 10170-DETAILS	TAB: DET-01 SP	LS: --	
DRAWING No: SP–12			

COPYRIGHT © 2016 by JMC All Rights Reserved. No part of this document may be reproduced, stored in a retrieval system, or transmitted in any form or by means, electronic, mechanical, photocopying, recording or otherwise, without the prior written permission of JMC PLANNING, ENGINEERING, LANDSCAPE ARCHITECTURE & LAND SURVEYING, PLLC | JMC SITE DEVELOPMENT CONSULTANTS, LLC | JOHN MEYER CONSULTING, INC. (JMC). Any modifications or alterations to this document without the written permission of JMC shall render them invalid and unusable.

NOT FOR CONSTRUCTION

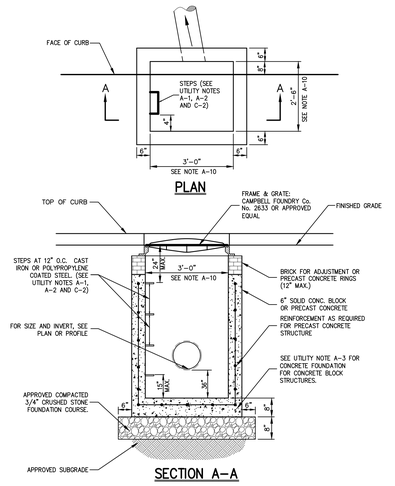

NOTE:
1. SEE NOTES PERTAINING TO DRAIN INLETS UNDER UTILITY NOTES ON THIS DRAWING.

DRAIN INLET (TYPE CI)
(with sump-without finger underdrains)

14

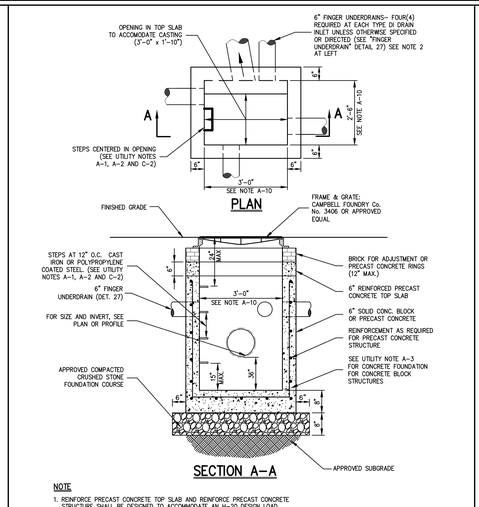

NOTE
1. REINFORCE PRECAST CONCRETE TOP SLAB AND REINFORCE PRECAST CONCRETE STRUCTURE SHALL BE DESIGNED TO ACCOMMODATE AN H-20 DESIGN LOAD.
2. LOCATIONS OF FINGER UNDERDRAINS MAY VARY FROM THAT AS SHOWN DEPENDING UPON NUMBER AND SIZE OF STORM DRAIN LINES ENTERING AND EXITING THE STRUCTURE.
3. SEE NOTES PERTAINING TO DRAIN INLETS UNDER UTILITY NOTES ON THIS DRAWING.

DRAIN INLET (TYPE DI)
(with sump-with finger underdrains)

15

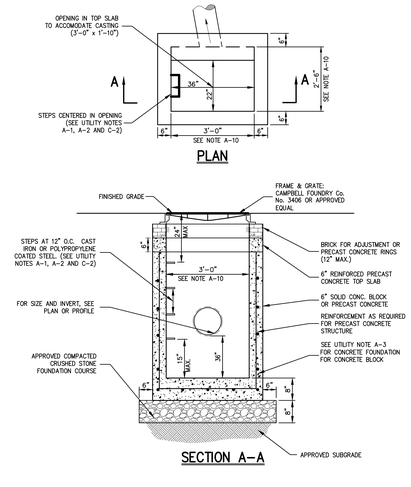

NOTE
1. REINFORCE PRECAST CONCRETE TOP SLAB AND REINFORCE PRECAST CONCRETE STRUCTURE SHALL BE DESIGNED TO ACCOMMODATE AN H-20 DESIGN LOAD.
2. SEE NOTES PERTAINING TO DRAIN INLETS UNDER UTILITY NOTES ON THIS DRAWING.

DRAIN INLET (TYPE DI)
(with sump-without finger underdrains)

16

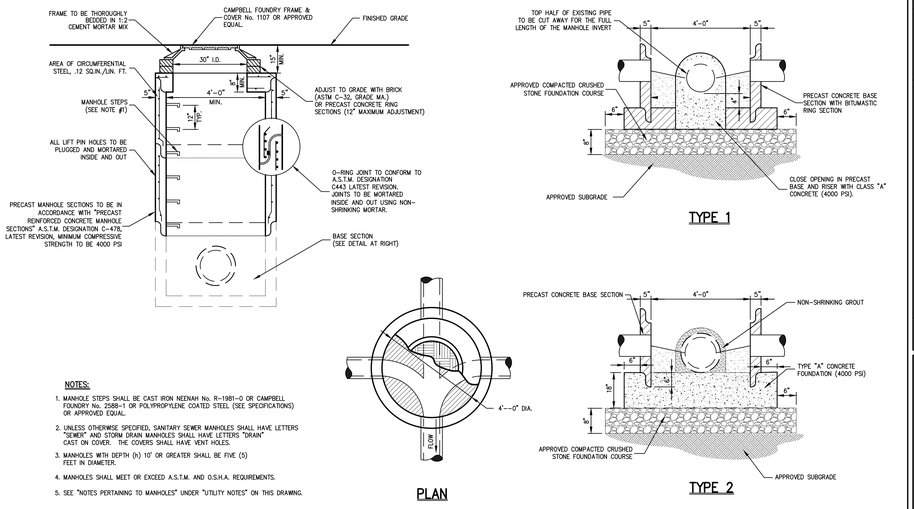

NOTES:
1. MANHOLE STEPS SHALL BE CAST IRON NEENAH No. R-1981-0 OR CAMPBELL FOUNDRY No. 2588-1 OR POLYPROPYLENE COATED STEEL (SEE SPECIFICATIONS) OR APPROVED EQUAL.
2. UNLESS OTHERWISE SPECIFIED, SANITARY SEWER MANHOLES SHALL HAVE LETTERS "SEWER" AND STORM DRAIN MANHOLES SHALL HAVE LETTERS "DRAIN" CAST ON COVER. THE COVERS SHALL HAVE VENT HOLES.
3. MANHOLES WITH DEPTH (h) 10' OR GREATER SHALL BE FIVE (5) FEET IN DIAMETER.
4. MANHOLES SHALL MEET OR EXCEED A.S.T.M. AND O.S.H.A. REQUIREMENTS.
5. SEE "NOTES PERTAINING TO MANHOLES" UNDER "UTILITY NOTES" ON THIS DRAWING.

DOGHOUSE MANHOLE

17

NO.	DATE	BY
1.	05/19/2014	CS
2.	11/20/2014	CS
3.	12/10/2014	CS
4.	03/17/2015	CS
5.	05/01/2015	CS
6.	05/15/2015	CS
7.	10/31/2016	CS

REVISION
1. SITE PLAN SUBMISSION
2. REVISED PER CITY COMMENTS
3. REVISED PER CITY COMMENTS
4. REVISED PER CITY COMMENTS
5. REVISED PER CITY COMMENTS
6. REVISED PER CITY COMMENTS
7. SITE PLAN SUBMISSION

Previous Editions Obsolete

PREPARED FOR:
FRENCH-AMERICAN SCHOOL OF NEW YORK
525 FENIMORE ROAD
MAMARONECK, NY 10543

PREPARED BY:
STANTEC
400 MORGAN CENTER
101 E. 52ND STREET, 5TH FLOOR
BUTLER, PA 16001-5923

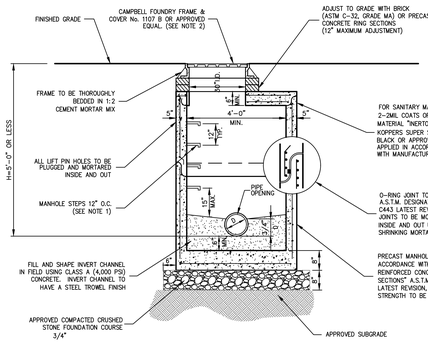

NOTES:
1. MANHOLE STEPS SHALL BE CAST IRON NEENAH No. R-1981-0 OR CAMPBELL FOUNDRY No. 2588-1 OR POLYPROPYLENE COATED STEEL (SEE SPECIFICATIONS) OR APPROVED EQUAL.
2. UNLESS OTHERWISE SPECIFIED, SANITARY SEWER MANHOLES SHALL HAVE LETTERS "SEWER" AND STORM DRAIN MANHOLES SHALL HAVE LETTERS "DRAIN" CAST ON COVER. THE COVERS SHALL HAVE VENT HOLES.
3. MANHOLES SHALL MEET OR EXCEED A.S.T.M. AND O.S.H.A. REQUIREMENTS.
4. SEE "NOTES PERTAINING TO MANHOLES" UNDER "UTILITY NOTES" ON THIS DRAWING.

MANHOLE (TYPE A)
(H < 5'-0")

18

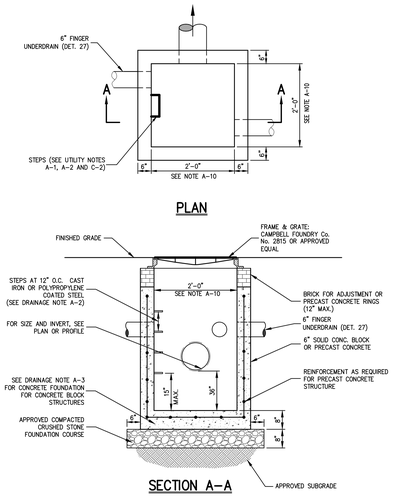

NOTE
1. SEE NOTES PERTAINING TO DRAIN INLETS UNDER UTILITY NOTES ON THIS DRAWING.
2. LOCATIONS OF FINGER UNDERDRAINS MAY VARY FROM THAT AS SHOWN DEPENDING UPON NUMBER AND SIZE OF STORM DRAIN LINES ENTERING AND EXITING THE STRUCTURE.

LAWN INLET
(with sump - with finger underdrains)

19

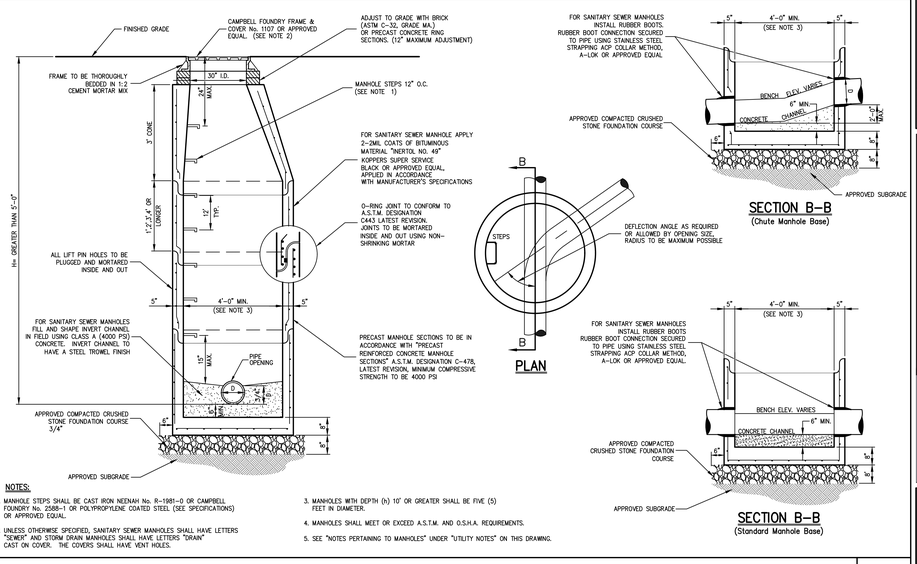

NOTES:
1. MANHOLE STEPS SHALL BE CAST IRON NEENAH No. R-1981-0 OR CAMPBELL FOUNDRY No. 2588-1 OR POLYPROPYLENE COATED STEEL (SEE SPECIFICATIONS) OR APPROVED EQUAL.
2. UNLESS OTHERWISE SPECIFIED, SANITARY SEWER MANHOLES SHALL HAVE LETTERS "SEWER" AND STORM DRAIN MANHOLES SHALL HAVE LETTERS "DRAIN" CAST ON COVER. THE COVERS SHALL HAVE VENT HOLES.
3. MANHOLES WITH DEPTH (h) 10' OR GREATER SHALL BE FIVE (5) FEET IN DIAMETER.
4. MANHOLES SHALL MEET OR EXCEED A.S.T.M. AND O.S.H.A. REQUIREMENTS.
5. SEE "NOTES PERTAINING TO MANHOLES" UNDER "UTILITY NOTES" ON THIS DRAWING.

MANHOLE (TYPE B)
(H > 5'-0"<10'-0")

20

JMC Planning, Engineering, Landscape Architecture & Land Surveying, PLLC
JMC Site Development Consultants, LLC
John Meyer Consulting, Inc.
120 BEDFORD ROAD • ARMONK, NY 10504
voice 914.273.5225 • fax 914.273.2102
www.jmcpllc.com

NOTES PERTAINING TO DRAIN INLETS

A-1 STEPS WILL NOT BE REQUIRED IN INLETS LESS THAN FOUR (4) FEET IN DEPTH. STEPS WILL BE REQUIRED IN INLETS FOUR (4) FEET OR GREATER IN DEPTH. DEPTHS FOR DRAIN INLETS SHALL BE MEASURED FROM FINISHED GRADE TO INSIDE BOTTOM OF STRUCTURE (INCLUDING SUMP AS APPLICABLE).

A-2 WHEN STEPS ARE REQUIRED, STEPS SHALL COMPLY WITH THE SAME REQUIREMENTS OF ASTM STANDARD C-478, ARTICLE 13 ENTITLED "MANHOLE STEPS & LADDERS".

A-3 FOR MASONRY STRUCTURES, THE FIRST COURSE OF MASONRY SHALL BE SET IN THE CONCRETE FOUNDATION BEFORE THE CONCRETE HAS SET. CONCRETE FOUNDATION SHALL BE CLASS "A"(4000 psi) CONCRETE, TWELVE (12) INCHES THICK AND SHALL EXTEND SIX (6) INCHES BEYOND THE OUTSIDE FACE THE STRUCTURE.

A-4 IT SHALL BE THE CONTRACTOR'S RESPONSIBILITY TO FURNISH AND CONSTRUCT THE PROPER SIZE STRUCTURE INCLUDING THE NECESSARY OPENINGS TO ACCOMMODATE THE WORK AS SHOWN ON THE PLANS OR ORDERED BY THE ENGINEER, AT NO ADDITIONAL COST TO THE OWNER.

A-5 ALL NECESSARY PATCHING FOR DRAIN STRUCTURES SHALL BE ACCOMPLISHED WITH NON-SHRINKING CEMENT MORTAR GROUT, APPROVED EQUAL TO SIKA-SET AS MANUFACTURED BY THE SIKA CHEMICAL CORP.

A-6 FOUNDATIONS FOR PRECAST CONCRETE STRUCTURES SHALL BE SET ON A COMPACTED LAYER OF APPROVED CRUSHED STONE HAVING A MINIMUM COMPACTED THICKNESS OF EIGHT (8) INCHES.

A-7 ALL PIPES SHALL BE CUT FLUSH WITH THE INSIDE WALL OF THE STRUCTURE.

A-8 PROVIDE REINFORCED CONCRETE TOP SLAB FOR OVERSIZED DRAIN INLETS WITH PROPER SIZE OPENING TO ACCOMMODATE INSTALLATION OF FRAME & GRATE.

A-9 FOR MASONRY STRUCTURES GREATER THAN TEN (10) FEET IN DEPTH, THICKNESS OF MASONRY WALLS SHALL BE INCREASED TO TWELVE (12) INCHES.

A-10 FOR ALL STRUCTURES GREATER THAN 10 FEET IN DEPTH, STRUCTURES SHALL PROVIDE MINIMUM INSIDE DIMENSIONS OF 4 FEET X 4 FEET.

NOTES PERTAINING TO MANHOLES

B-1 PRECAST CONCRETE MANHOLES SHALL COMPLY WITH ASTM STANDARD C-478. MANHOLE JOINTS SHALL COMPLY WITH ASTM STANDARD C-443.

B-2 FOR PRECAST CONCRETE MANHOLES FIVE (5) FEET OR LESS IN HEIGHT, TOP CONE SECTION SHALL BE REPLACED WITH PRECAST REINFORCED CONCRETE SLAB (8" MIN. THICKNESS) WITH OPENING OF SUFFICIENT SIZE TO ACCOMMODATE MANHOLE CASTING.

B-3 FOR MANHOLES 10 FEET OR MORE IN DEPTH, MANHOLE DIAMETER SHALL BE FIVE (5) FEET.

B-4 TERMINAL MANHOLE FLOORS SHALL BE SLOPED TOWARD OUTFALL PIPE.

B-5 INVERT CHANNELS FOR PRECAST CONCRETE MANHOLES SHALL BE CONSTRUCTED OF CONCRETE.

B-6 NOTES A-1, A-2, A-4, A-5, A-6 & A-7 UNDER "NOTES PERTAINING TO DRAIN INLETS" ABOVE SHALL APPLY TO MANHOLES.

NOTES PERTAINING TO PRECAST CONCRETE STRUCTURES FOR STORM DRAINS, SANITARY SEWERS AND WATER LINES

C-1 ALL PRECAST CONCRETE STRUCTURES SHALL BE DESIGNED TO ACCOMMODATE AN H-20 DESIGN LOAD.

C-2 STEPS SHALL BE LOCATED WITHIN STRUCTURE TO AVOID PLACEMENT OVER PIPES WHEN PRACTICABLE.

UTILITY NOTES

21

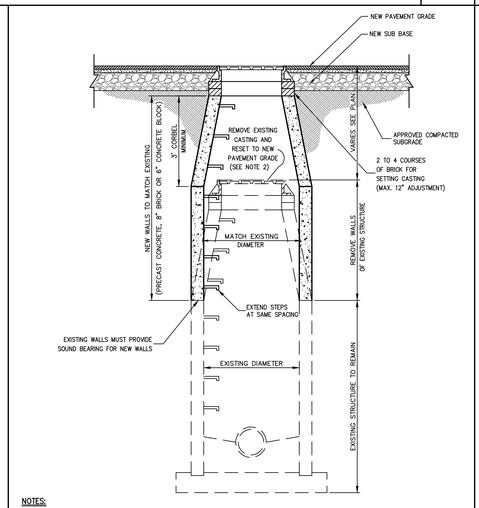

NOTES:
1. SEE "UTILITY NOTES" ON THIS DRAWING WHICH SHALL APPLY TO THIS DETAIL.
2. IF EXISTING CASTING IS UNFIT FOR RESETTING IN THE NEW CONSTRUCTION, AS DETERMINED BY THE OWNER'S FIELD REPRESENTATIVE, CONTRACTOR SHALL FURNISH AND SET NEW CASTING.

EXISTING MANHOLE RECONSTRUCTED AND RAISED

22

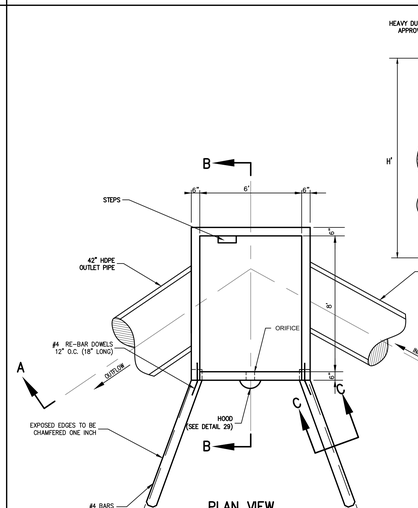

STRUCTURE CHART

BASIN	STRUCTURE	STRUCTURE			CIRCULAR ORIFICE		OUTLET CULVERT		POND DRAIN		PERMANENT WATER SURFACE
		SIZE	HEIGHT	TG	OI		CV		PD		PP
No.	No.	L' x W'	H'	TOP GRATE	DIA.	INVERT ELEV.	DIA.	INVERT ELEV.	DIA.	INVERT ELEV.	ELEVATION
1A	OCS A-2	8.00'X6.00'	8.85	264.30	5.50"	262.20	42"	256.50	4"	256.50	262.20

NOTES:
1. PRECAST CONCRETE STRUCTURE SHALL BE DESIGNED TO ACCOMMODATE AN H-20 DESIGN LOAD.
2. SEE UTILITY NOTES A-4 TO A-7 ON THIS DRAWING.

OUTLET CONTROL STRUCTURE (OCS A-2)

23

ANY ALTERATION OF PLANS, SPECIFICATIONS, PLATS AND REPORTS BEARING THE SEAL OF A LICENSED PROFESSIONAL ENGINEER OR LICENSED LAND SURVEYOR IS A VIOLATION OF SECTION 7209 OF THE NEW YORK STATE EDUCATION LAW, EXCEPT AS PROVIDED FOR BY SECTION 7209, SUBSECTION 2.

CONSTRUCTION DETAILS

FRENCH-AMERICAN SCHOOL OF NEW YORK
336 RIDGEWAY
CITY OF WHITE PLAINS, NEW YORK

DRAWN:	CS
APPROVED:	RR
SCALE:	N.T.S.
DATE:	09/29/2014
PROJECT No:	10170
DWG: 1070-DETAILS	TAB: DET-02 SP
LD:	---
DRAWING No:	SP-13

NOT FOR CONSTRUCTION

COPYRIGHT © 2014 by JMC. All rights Reserved. No part of this document may be reproduced, stored in a retrieval system or transmitted in any form by any means, mechanical, photocopying, recording or otherwise, without the prior written permission of JMC PLANNING ENGINEERING LANDSCAPE ARCHITECTURE & LAND SURVEYING, PLLC AND SITE DEVELOPMENT CONSULTANTS, LLC. THESE PLANS ARE THE PROPERTY OF JMC PLANNING ENGINEERING LANDSCAPE ARCHITECTURE & LAND SURVEYING, PLLC AND SITE DEVELOPMENT CONSULTANTS, LLC AND ARE NOT TO BE USED IN WHOLE OR IN PART FOR ANY OTHER PROJECT WITHOUT THE WRITTEN AUTHORIZATION OF JMC PLANNING ENGINEERING LANDSCAPE ARCHITECTURE & LAND SURVEYING, PLLC AND SITE DEVELOPMENT CONSULTANTS, LLC.

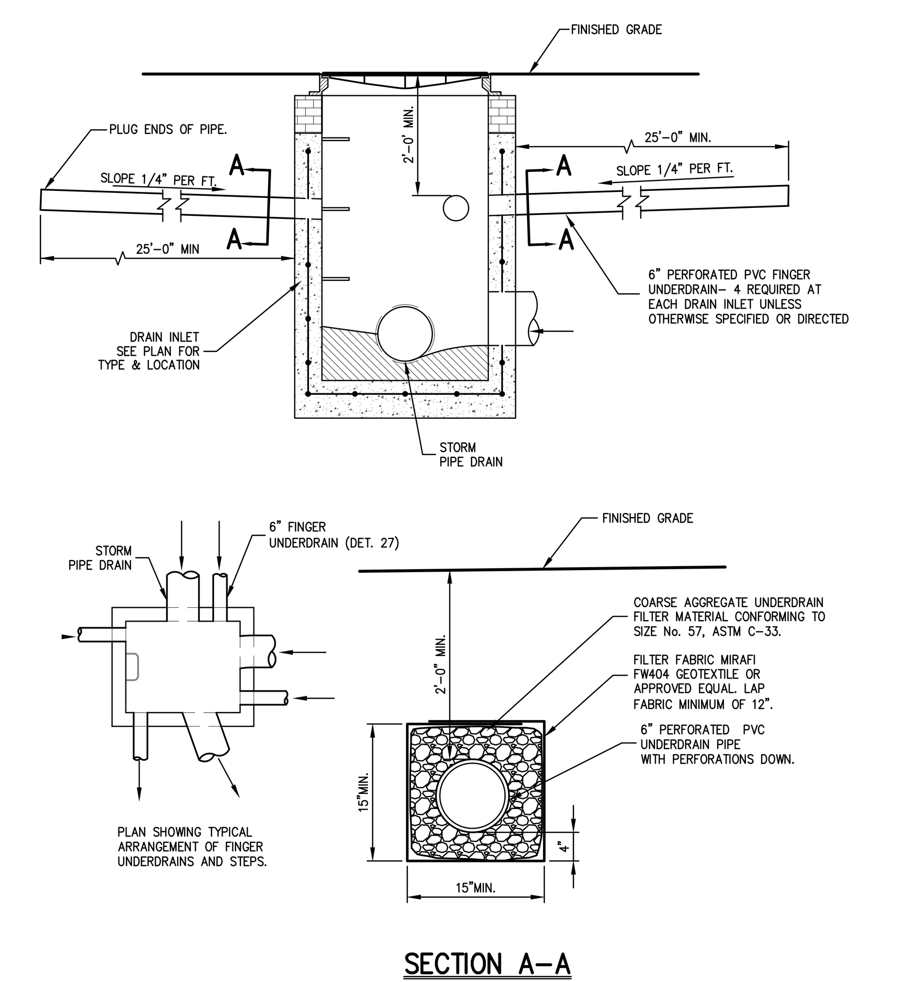

NOTE:

1. LOCATIONS OF FINGER DRAINS MAY VARY FROM THAT AS SHOWN DEPENDING UPON NUMBER AND SIZE OF STORM DRAIN LINES ENTERING AND EXITING THE STRUCTURE.

FINGER UNDERDRAIN — 24

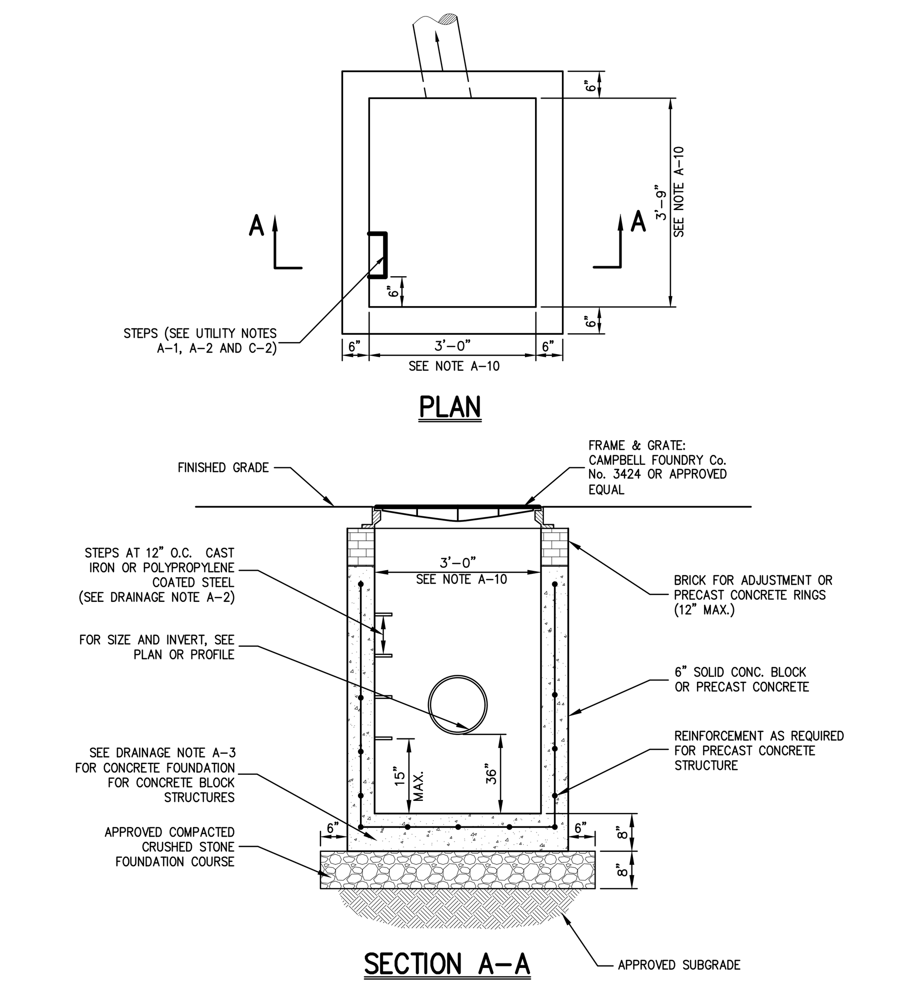

NOTE

1. REINFORCE PRECAST CONCRETE TOP SLAB AND REINFORCE PRECAST CONCRETE STRUCTURE SHALL BE DESIGNED TO ACCOMMODATE AN H-20 DESIGN LOAD.
2. SEE NOTES PERTAINING TO DRAIN INLETS UNDER UTILITY NOTES ON SP-13 DRAWING.

DRAIN INLET (TYPE DDI) — 25

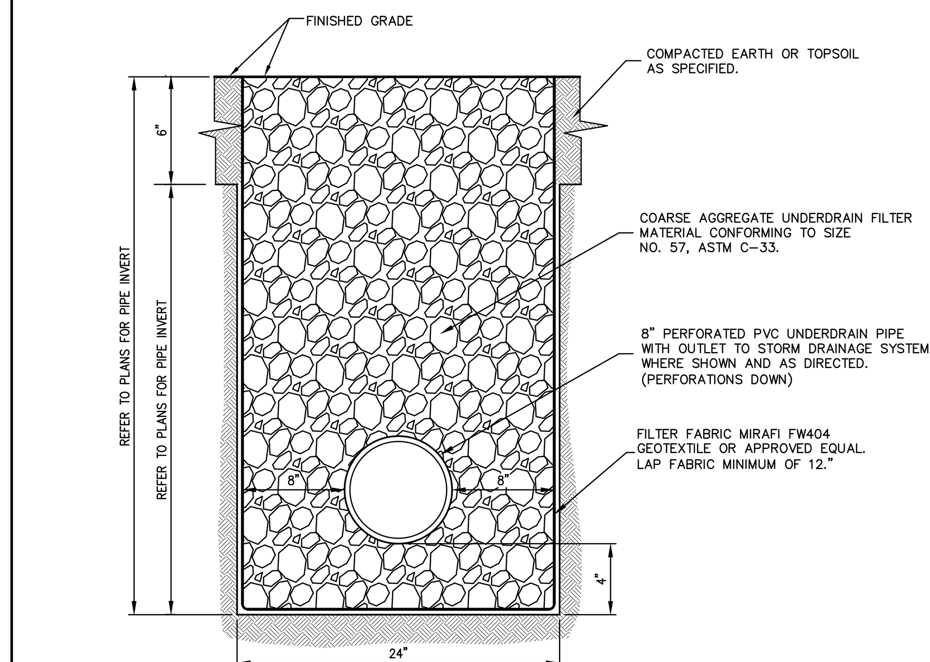

EXPOSED GRAVEL UNDERDRAIN PIPE — 26

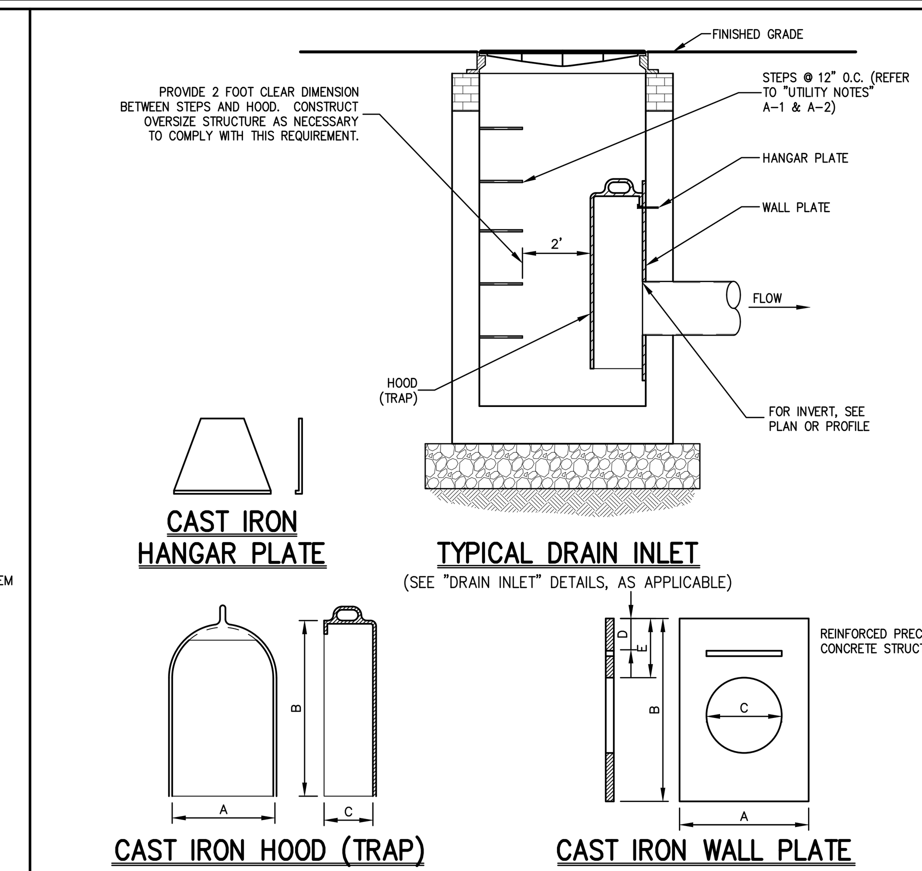

CAST IRON HOOD (TRAP)

PATTERN NUMBER	DIMENSIONS IN INCHES A	B	C	PIPE SIZE
2560	9½	16	4¾	6
2561	11½	20½	5½	8
2562	13¼	23½	6½	10
2563	15¼	26	7½	12
2564	18	27	9	15
2565	20¼	27	10¼	18
2566	25¼	30	11¼	21

CAST IRON WALL PLATE

PATTERN NUMBER	DIMENSIONS IN INCHES A	B	C	D	E	PIPE SIZE
2560 210	13	22	8	3½	9½	6
2561 210	13	22	10	3½	8½	8
2562 210	15	23	12½	3½	7¼	10
2563 210	22	33	15	6	9	12
2564 210	23	35	19¾	5½	9¾	15
2565 210	25¼	35¾	21	5	8½	18
2566 210	30½	42¼	24	6	10	21

NOTES:

1. PATTERN NUMBERS SHOWN REFER TO CAMPBELL FOUNDRY COMPANY.
2. CAST IRON HOOD (TRAP) SHALL BE FURNISHED WITH WALL PLATE AND HANGAR PLATE.

HOODED OUTLET (TRAP) — 27

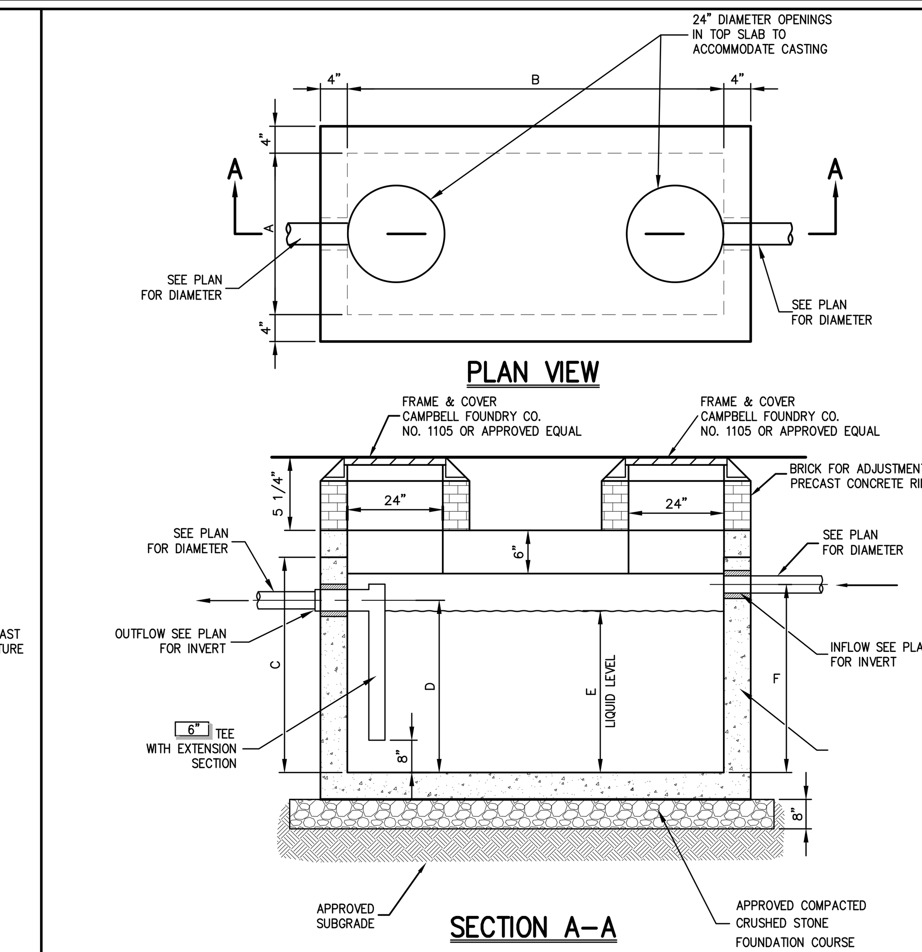

NOTES

1. CONCRETE TO TEST 4,000 PSI AT 28 DAYS.
2. GREASE PIT TO BE DESIGNED TO ACCOMODATE AN H-20 DESIGN LOAD.
3. GREASE PIT AS PROVIDED BY PRECAST CONCRETE SALES COMPANY, OR APPROVED EQUAL.

DIMENSIONS (FEET)						
STRUCTURE	A	B	C	D	E	F
GREASE TRAP	6'	12'	6'-9"	6'-0"	5'-10"	6'-3"

GREASE TRAP — 28
(3,000 GALLON)

ACCEPTABLE FILL MATERIALS: SC-310 CHAMBER SYSTEMS

	MATERIAL LOCATION	DESCRIPTION	AASHTO M43 DESIGNATION[1]	COMPACTION/DENSITY REQUIREMENT
D	FILL MATERIAL FOR LAYER 'D' STARTS FROM THE TOP OF THE 'C' LAYER TO THE BOTTOM OF FLEXIBLE PAVEMENT OR UNPAVED FINISH GRADE ABOVE. NOTE THAT PAVEMENT SUBBASE MAY BE PART OF THIS LAYER.	ANY SOIL/ROCK MATERIALS, NATIVE SOILS, OR PER ENGINEER'S PLANS. CHECK PLANS FOR PAVEMENT SUBGRADE REQUIREMENTS.	N/A	PREPARE PER ENGINEER'S PLANS. PAVED INSTALLATIONS MAY HAVE STRINGENT MATERIAL AND PREPARATION REQUIREMENTS.
C	FILL MATERIAL FOR LAYER 'C' STARTS FROM THE TOP OF THE EMBEDMENT STONE ('B' LAYER) TO 18" [457 mm] ABOVE THE TOP OF THE CHAMBER. NOTE THAT PAVEMENT SUBBASE MAY BE A PART OF THIS LAYER.	GRANULAR WELL-GRADED SOIL/AGGREGATE MIXTURES, < 35% FINES. MOST PAVEMENT SUB-BASE MATERIALS CAN BE USED IN LIEU OF THIS LAYER.	3, 357, 4, 467, 5, 56, 57, 6, 67, 68, 7, 78, 8, 89, 9, 10	BEGIN COMPACTION AFTER 12" [305 mm] OF MATERIAL OVER THE CHAMBERS IS REACHED. COMPACT ADDITIONAL LAYERS IN 6" [152 mm] LIFTS TO A MIN. 95% STANDARD PROCTOR DENSITY. ROLLER GROSS VEHICLE WEIGHT NOT TO EXCEED 12,000 lbs [53 kN]. DYNAMIC FORCE NOT TO EXCEED 20,000 lbs [89 kN].
B	EMBEDMENT STONE SURROUNDING THE CHAMBERS FROM THE FOUNDATION STONE ('A' LAYER) TO THE 'C' LAYER ABOVE.	CLEAN, CRUSHED, ANGULAR STONE, NOMINAL SIZE DISTRIBUTION BETWEEN 3/4 - 2 INCH [19 - 51 mm]	3, 357, 4, 467, 5, 56, 57	NO COMPACTION REQUIRED.
A	FOUNDATION STONE BELOW CHAMBERS FROM THE SUBGRADE UP TO THE FOOT (BOTTOM) OF THE CHAMBER.	CLEAN, CRUSHED, ANGULAR STONE, NOMINAL SIZE DISTRIBUTION BETWEEN 3/4 - 2 INCH [19 - 51 mm]	3, 35, 4, 467, 5, 56, 57	PLATE COMPACT OR ROLL TO ACHIEVE A 95% STANDARD PROCTOR DENSITY[2].

PLEASE NOTE:
1. THE LISTED AASHTO DESIGNATIONS ARE FOR GRADATIONS ONLY. THE STONE MUST ALSO BE CLEAN, CRUSHED, ANGULAR. FOR EXAMPLE, A SPECIFICATION FOR #4 STONE WOULD STATE: "CLEAN, CRUSHED, ANGULAR NO. 4 (AASHTO M43) STONE".

2. AS AN ALTERNATE TO PROCTOR TESTING AND FIELD DENSITY MEASUREMENTS ON OPEN GRADED STONE, STORMTECH COMPACTION REQUIREMENTS ARE MET FOR 'A' LOCATION MATERIALS WHEN PLACED AND COMPACTED IN 9" [229 mm] (MAX) LIFTS USING TWO FULL COVERAGES WITH AN APPROPRIATE COMPACTOR.

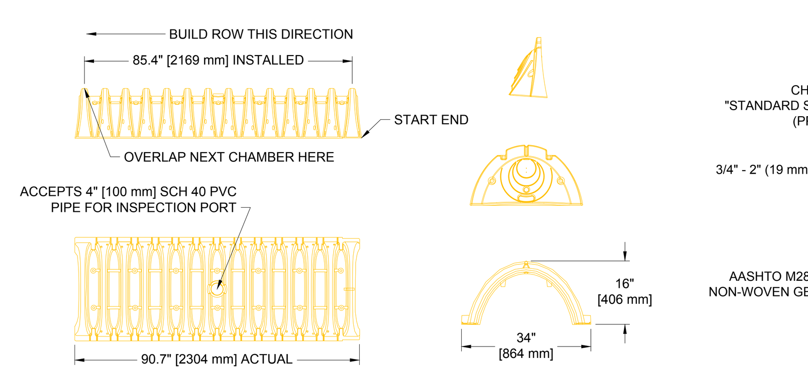

NOMINAL CHAMBER SPECIFICATIONS

SIZE (W x H x INSTALLED LENGTH)	34.0" x 16.0" x 85.4" [864 mm x 406 mm x 2169 mm]
CHAMBER STORAGE	14.7 CUBIC FEET [0.42 m³]
MINIMUM INSTALLED STORAGE	31.0 CUBIC FEET [0.88 m³]
WEIGHT	37 lbs. [16.8 kg]

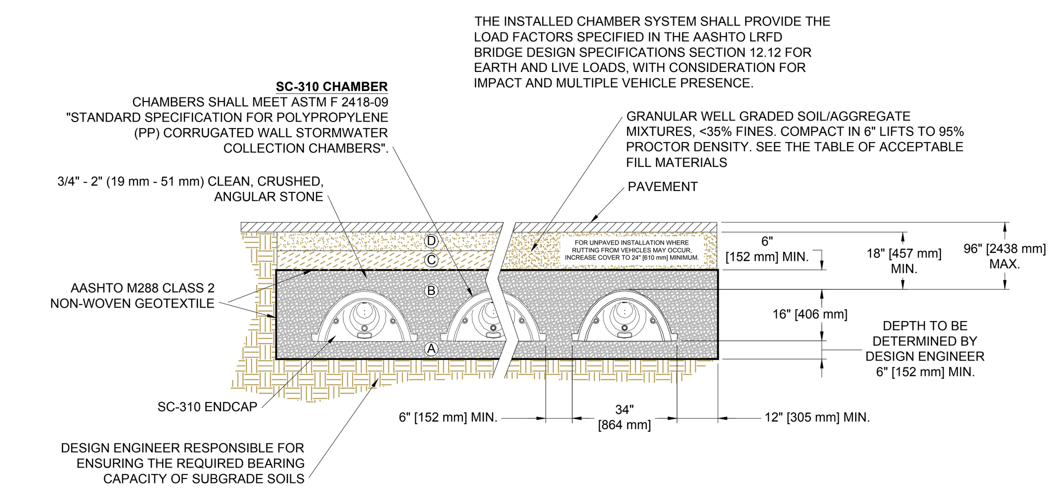

SECTION AT DETENTION AND WATER QUALITY CONTROL

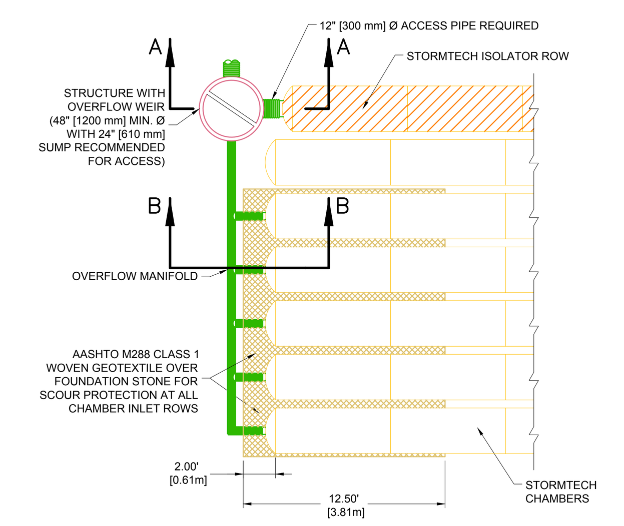

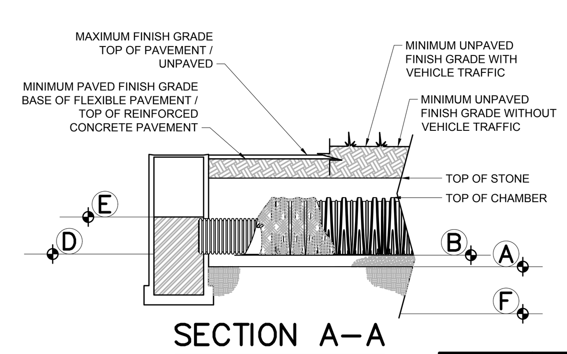

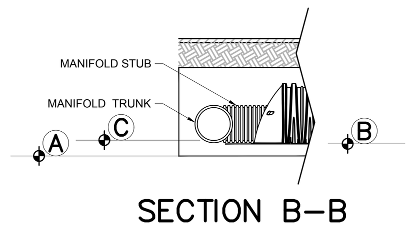

SCHEDULE OF INVERTS

DESIGNATION	(A) BOTTOM OF STONE	(B) CHAMBER BOTTOM	(C) MANIFOLD & STUB INVERT	(D) ISOLATOR ROW PIPE INVERT	(E) OVERFLOW WEIR INVERT (ISOLATOR ROW)	(F) GROUNDWATER ELEVATION
2A-1	264.50	265.00	265.00	265.00	266.00	261.00

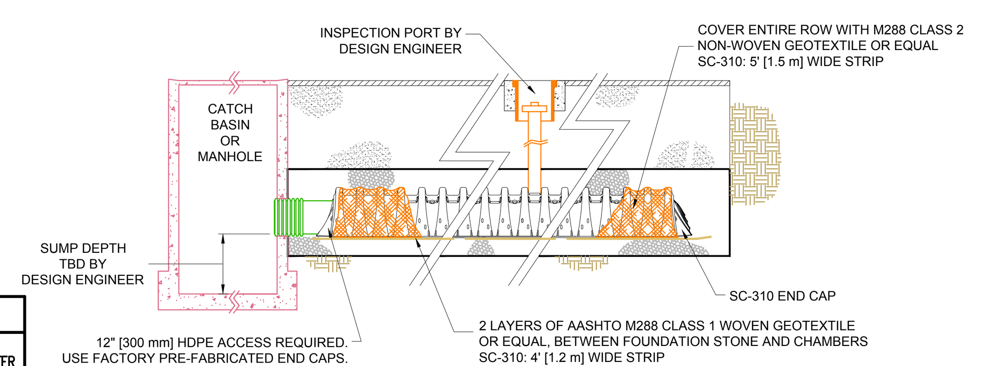

SECTION AT ISOLATOR ROW

STORMTECH CHAMBERS — 29
(MODEL SC-310)

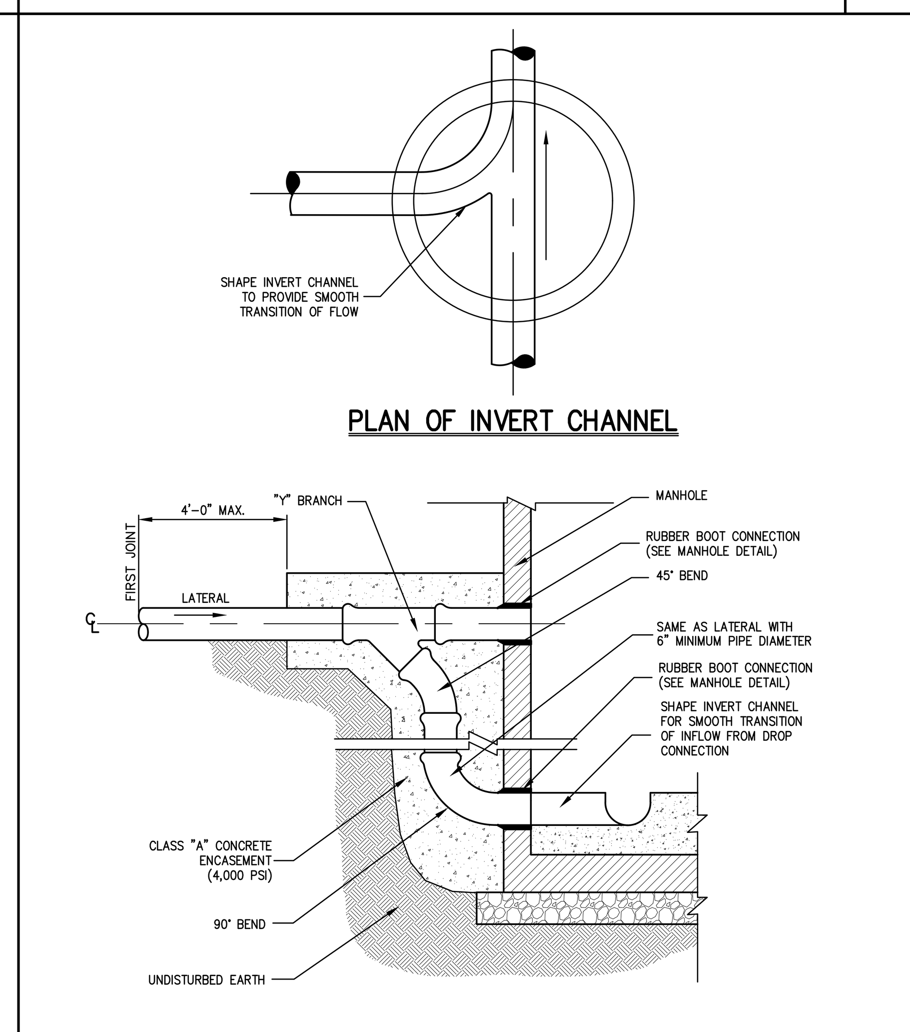

NOTES:

1. DROP CONNECTION SHALL BE USED WHEN INCOMING SANITARY SEWER IS MORE THAN 2'-0" HIGHER THAN THE OUTGOING SEWER.
2. PIPE SIZE OF DROP CONNECTION SHALL BE THE SAME SIZE AS LATERAL WITH 6" MINIMUM DIAMETER.

DROP CONNECTION AT MANHOLE — 30
(SANITARY SEWER)

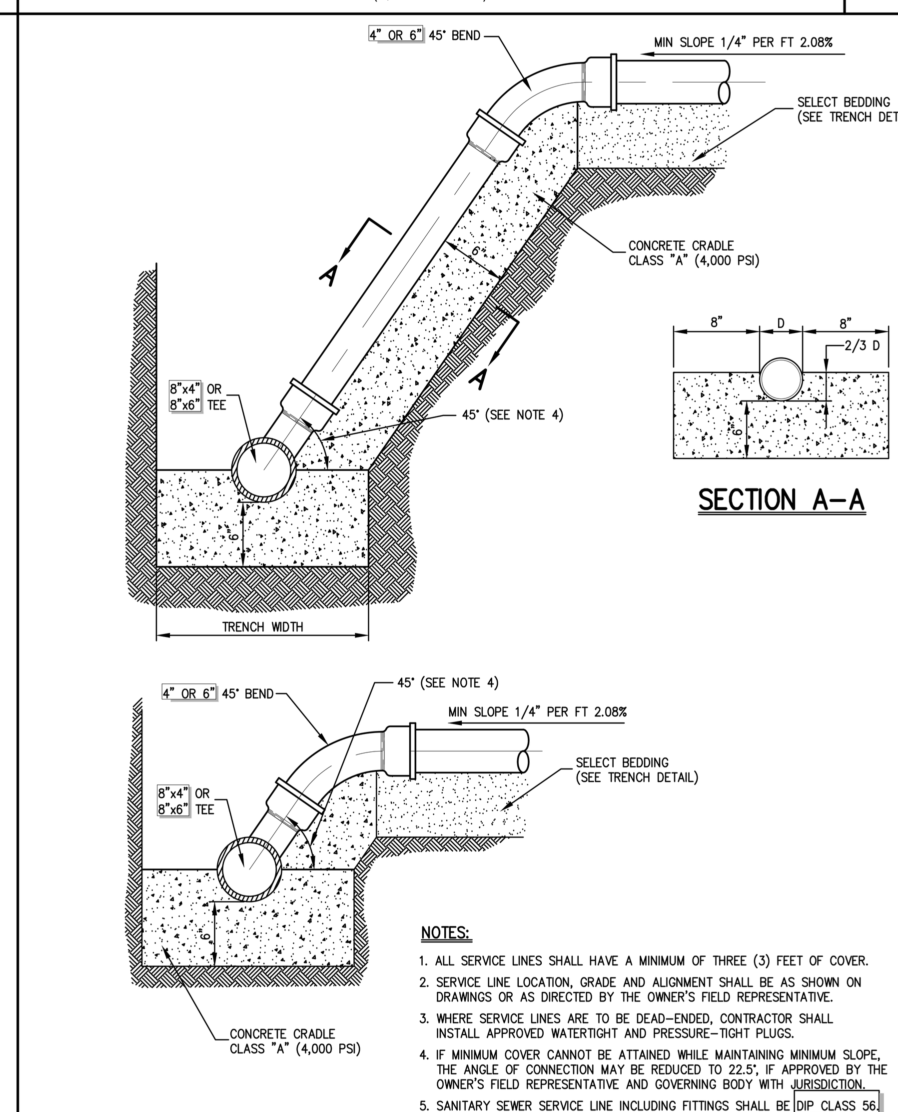

NOTES:

1. ALL SERVICE LINES SHALL HAVE A MINIMUM OF THREE (3) FEET OF COVER.
2. SERVICE LINE LOCATION, GRADE AND ALIGNMENT SHALL BE AS SHOWN ON DRAWINGS OR AS DIRECTED BY THE OWNER'S FIELD REPRESENTATIVE.
3. WHERE SERVICE LINES ARE TO BE DEAD-ENDED, CONTRACTOR SHALL INSTALL APPROVED WATERTIGHT AND PRESSURE-TIGHT PLUGS.
4. IF MINIMUM COVER CANNOT BE ATTAINED WHILE MAINTAINING MINIMUM SLOPE, THE ANGLE OF CONNECTION MAY BE REDUCED TO 22.5°, IF APPROVED BY THE OWNER'S FIELD REPRESENTATIVE AND GOVERNING BODY WITH JURISDICTION.
5. SANITARY SEWER SERVICE LINE INCLUDING FITTINGS SHALL BE DIP CLASS 56.

SANITARY SEWER SERVICE CONNECTION — 31
(4" & 6")

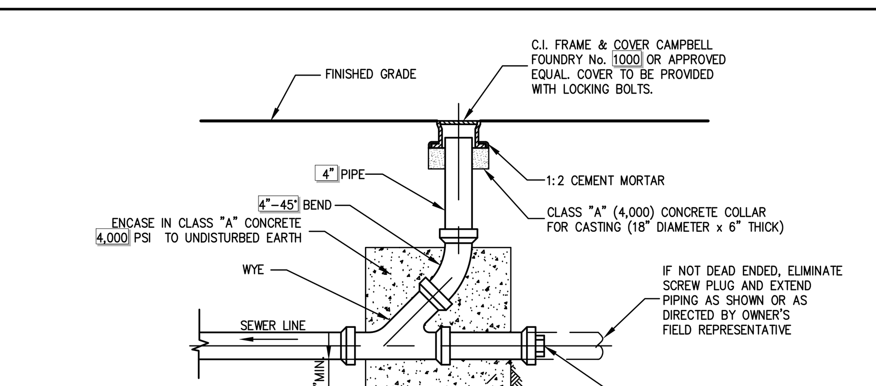

NOTES:

1. ALL PIPE MATERIAL FOR CLEANOUT TO BE DUCTILE IRON PIPE.
2. FOR INVERT OF SEWER LINE SEE PLAN.

CLEANOUT — 32

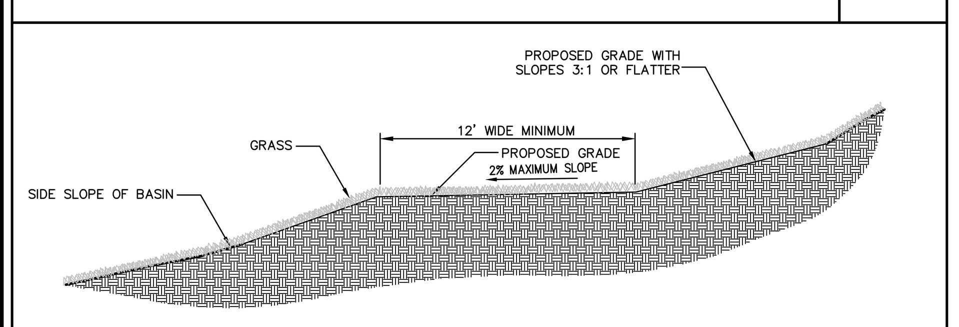

NOTES:

1. MAXIMUM SLOPE OF NO MORE THAN 15%, AND BE APPROPRIATELY STABILIZED TO WITHSTAND MAINTENANCE EQUIPMENT AND VEHICLES.
2. AREA ADJACENT TO ACCESS ROUTE TO BE BROUGHT TO FINISHED GRADE IMMEDIATELY AS REQUIRED, TOPSOILED, SEEDED AND MAINTAINED FOR EROSION CONTROL.

STORMWATER BASIN ACCESS ROUTES — 33

W = END WIDTH (feet)
La = LENGTH (feet)
Do = DIAMETER (feet)
d50 = MEDIAN STONE DIAMETER (feet)
TW = TAILWATER (feet)
Q = DISCHARGE (cfs)
T = THICKNESS OF APRON (feet)

APRON	Q	Do	TW	W	La	d50	T
HW B-1	11.19	1.50	3.11	5.5	10	0.33	0.75
HW C-1	10.70	1.50	3.11	4.7	8	0.33	0.75
HW D-1	54	3	3.11	8.6	14	0.33	0.75

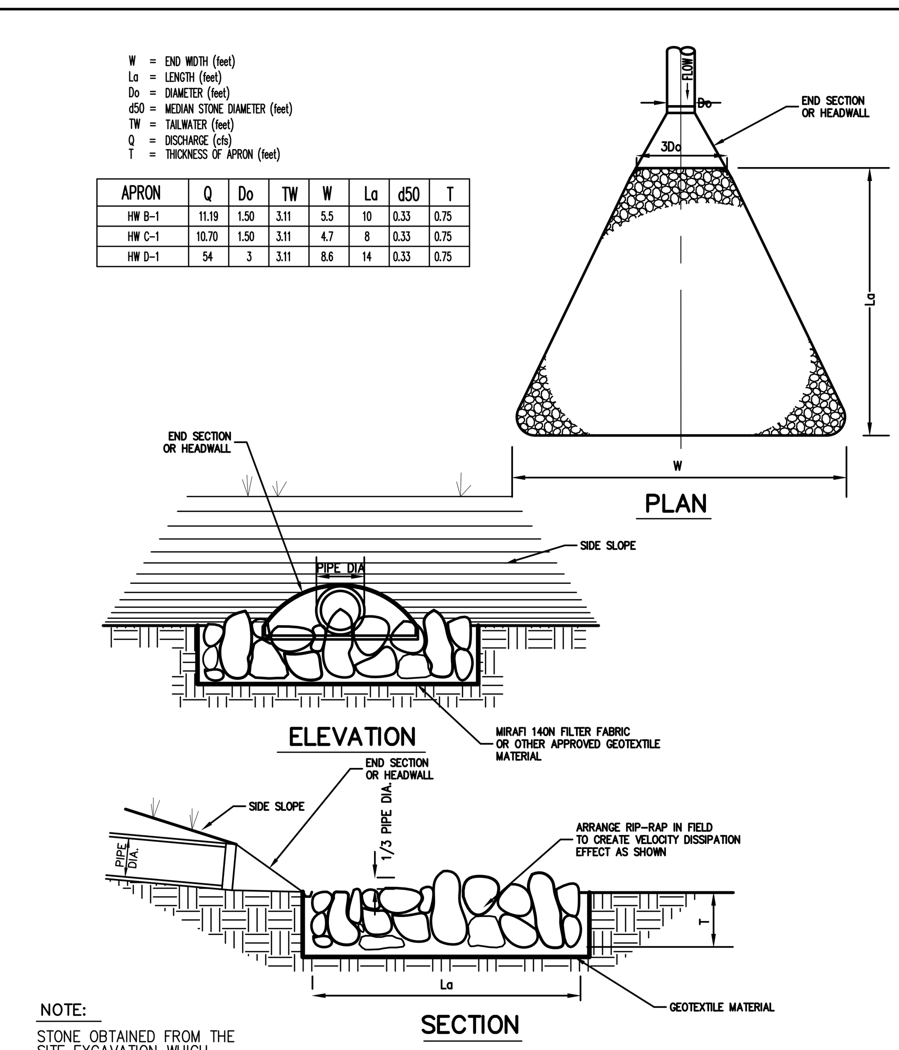

NOTE:
STONE OBTAINED FROM THE SITE EXCAVATION WHICH CONFORMS TO THE SPECIFICATIONS MAY BE USED AS RIP-RAP.

RIP-RAP APRON/ENERGY DISSIPATOR — 34

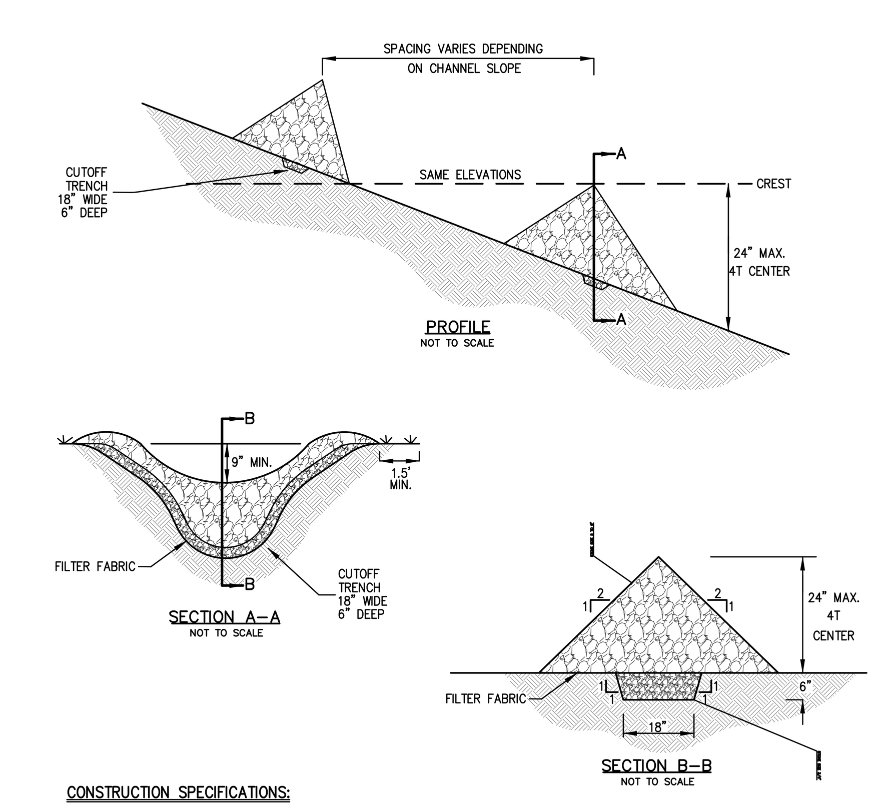

CONSTRUCTION SPECIFICATIONS:

1. STONE WILL BE PLACED ON A FILTER FABRIC FOUNDATION TO THE LINES, GRADES AND LOCATIONS SHOWN IN THE PLAN.
2. SET SPACING OF CHECK DAMS TO ASSURE THAT THE ELEVATIONS OF THE CREST OF THE DOWNSTREAM DAM IS AT THE SAME ELEVATION OF THE TOE OF THE UPSTREAM DAM.
3. EXTEND THE STONE A MINIMUM OF 1.5 FEET BEYOND THE DITCH BANK TO PREVENT CUTTING AROUND THE DAM.
4. PROTECT THE CHANNEL DOWNSTREAM OF THE LOWEST CHECK DAM FROM SCOUR AND EROSION WITH STONE OR LINER AS APPROPRIATE.
5. ENSURE THAT CHANNEL APPURTENANCES SUCH AS CULVERT ENTRANCES BELOW CHECK DAMS ARE NOT SUBJECT TO DAMAGE OR BLOCKAGE FROM DISPLACED STONES.

MAXIMUM DRAINAGE AREA 2 ACRES.

STONE CHECK DAM — 35

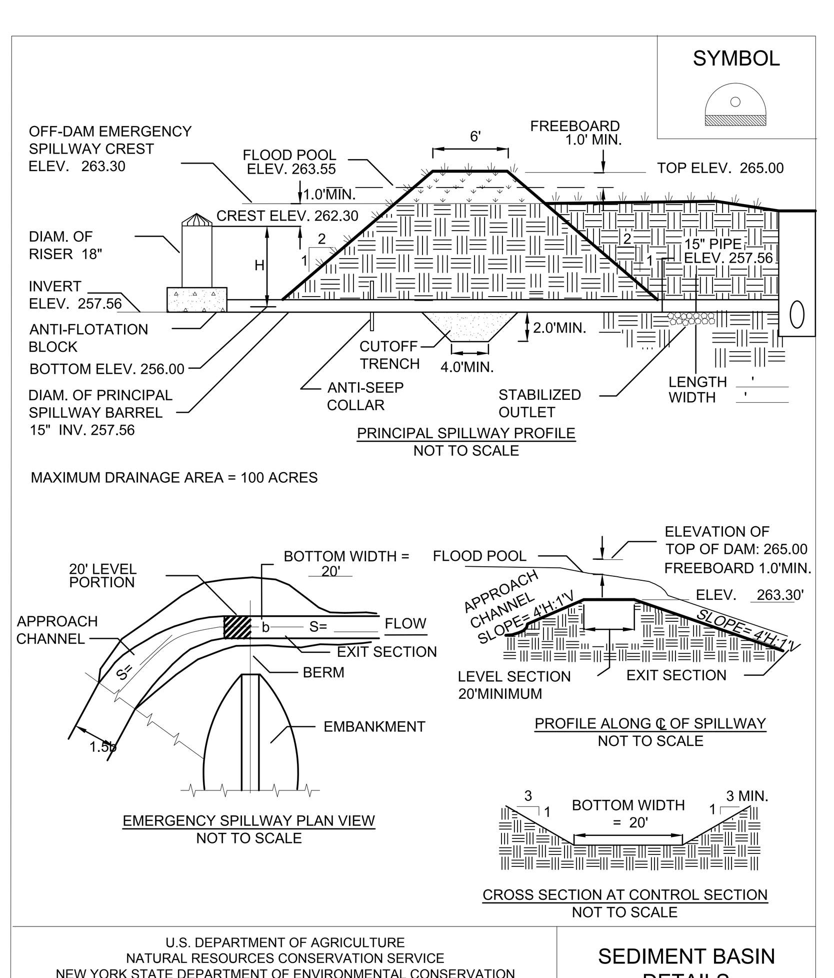

SEDIMENT BASIN DETAIL — 36

ANY ALTERATION OF PLANS, SPECIFICATIONS, PLATS AND REPORTS BEARING THE SEAL OF A LICENSED PROFESSIONAL ENGINEER OR LICENSED LAND SURVEYOR IS A VIOLATION OF SECTION 7209 OF THE NEW YORK STATE EDUCATION LAW, EXCEPT AS PROVIDED FOR BY SECTION 7209, SUBSECTION 2.

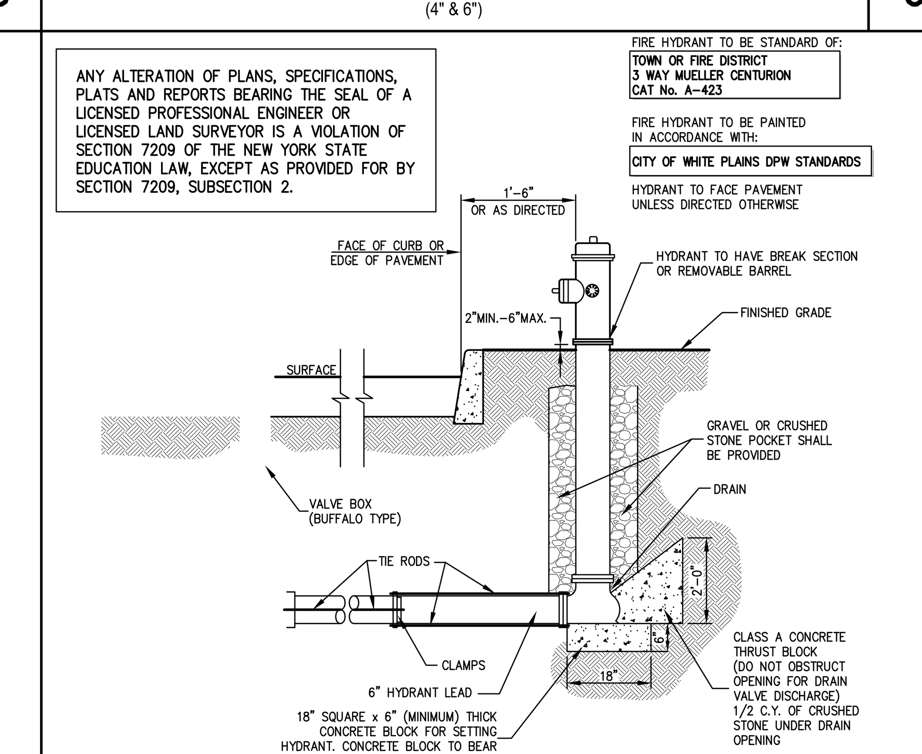

1. ALL CONCRETE THRUST BLOCKS SHALL BEAR ON UNDISTURBED GROUND.
2. RODDING SHALL CONSIST OF TWO 3/4" THREADED STEEL TIE RODS WITH NUTS AND WASHERS COMPLETE WITH ALL NECESSARY AND REQUIRED CLAMPS, CAREFULLY AND THOROUGHLY COVERED WITH ASPHALT OR OTHER ACCEPTABLE CORROSIVE RETARDING MATERIAL. IN GENERAL, THE METHOD AND TYPES OF MATERIAL REQUIRED IN THE INSTALLATION OF CLAMPS AND THE RODS SHALL BE IN ACCORDANCE WITH THE LATEST NATIONAL FIRE
3. HYDRANT DRAINS SHALL NOT BE CONNECTED TO OR WITHIN TEN (10) FEET OF SANITARY
4. IF GROUND WATER IS FOUND WITHIN SEVEN (7) FEET OF THE SURFACE, HYDRANT DRAINS ARE TO BE PLUGGED. WHEN DRAINS ARE TO BE PLUGGED, THE BARRELS MUST BE PUMPED DRY AFTER USE DURING FREEZING WEATHER. SUCH HYDRANTS SHALL BE IDENTIFIED WITH A VISIBLE MARKING AS APPROVED BY THE WATER AUTHORITY.
5. RECOMMENDED STANDARDS FOR WATER WORKS, 2012 EDITION, SECTION 8.4.4 – HYDRANT DRAINAGE:
   A. HYDRANT DRAINS SHOULD BE PLUGGED. WHEN THE DRAINS ARE PLUGGED THE BARRELS MUST BE PUMPED DRY AFTER USE DURING FREEZING WEATHER.
   B. WHERE HYDRANT DRAINS ARE NOT PLUGGED, A GRAVEL POCKET OR DRY WELL SHALL BE PROVIDED UNLESS THE NATURAL SOILS WILL PROVIDE ADEQUATE DRAINAGE.
   C. HYDRANT DRAINS SHALL NOT BE CONNECTED TO OR LOCATED WITHIN 10 FEET OF SANITARY SEWER, STORM SEWER, OR STORM DRAINS.
   D. HYDRANT DRAINS, WHERE ALLOWED, MUST BE ABOVE THE SEASONAL GROUNDWATER TABLE.

HYDRANT INSTALLATION — 37

NO.	REVISION	DATE	BY
1.	SITE PLAN SUBMISSION	05/19/2014	CS
2.	REVISED PER CITY COMMENTS	10/20/2014	CS
3.	REVISED PER CITY COMMENTS	12/10/2014	CS
4.	REVISED PER CITY COMMENTS	03/17/2015	CS
5.	REVISED PER CITY COMMENTS	05/01/2015	CS
6.	REVISED PER CITY COMMENTS	05/15/2015	CS
7.	SITE PLAN SUBMISSION	10/31/2016	CS

Previous Editions Obsolete

APPLICANT/OWNER:
FRENCH-AMERICAN SCHOOL OF NEW YORK
525 FENIMORE ROAD
MAMARONECK, NY 10543

ARCHITECT:
STANTEC
400 MORGAN CENTER
101 EAST DIAMOND STREET
BUTLER, PA 16001-5923

JMC Planning, Engineering, Landscape Architecture & Land Surveying, PLLC
JMC Site Development Consultants, LLC
John Meyer Consulting, Inc.
120 BEDFORD ROAD • ARMONK, NY 10504
voice 914.273.5225 • fax 914.273.2102
www.jmcpllc.com

CONSTRUCTION DETAILS

FRENCH-AMERICAN SCHOOL OF NEW YORK
336 RIDGEWAY
CITY OF WHITE PLAINS, NEW YORK

DRAWN: CS	APPROVED: RR
SCALE: N.T.S.	
DATE: 09/29/2014	
PROJECT No: 10170	
DWG: 10170-DETAILS	TAB: DET-03 SP / LS: --
DRAWING No: SP-14	

COPYRIGHT © 2016 by JMC. All Rights Reserved. No part of this document may be reproduced, stored in a retrieval system, or transmitted in any form or by means, electronic, mechanical, photocopying, recording or otherwise, without the prior written permission of JMC PLANNING, ENGINEERING, LANDSCAPE ARCHITECTURE & LAND SURVEYING, PLLC | JMC SITE DEVELOPMENT CONSULTANTS, LLC | JOHN MEYER CONSULTING, INC. (JMC). Any modifications or alterations to this document without the written permission of JMC shall render them invalid and unusable.
NOT FOR CONSTRUCTION

38 ANCHOR AND THRUST BLOCKS

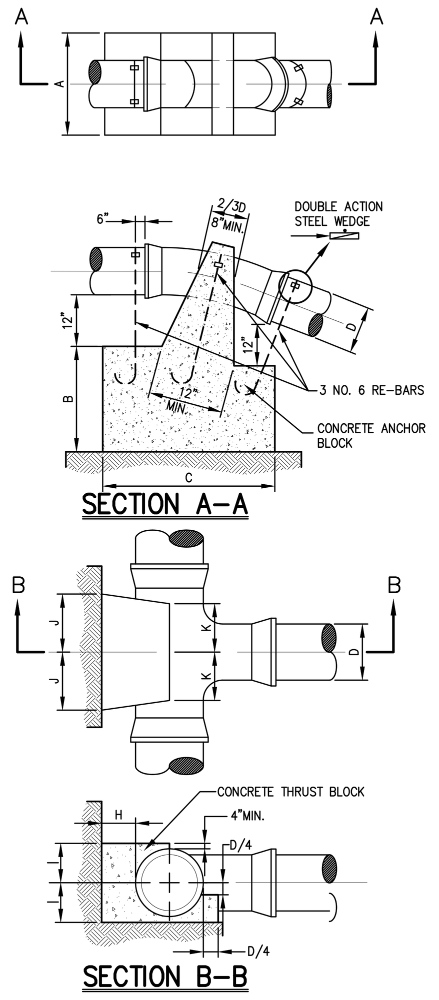

VERTICAL BEND

BEND		DIAMETER (D) 4"	6"	8"	10"	12"	16"
1/32	A	1'-6"	1'-6"	2'-0"	2'-6"	3'-0"	3'-6"
	B	1'-3"	1'-3"	1'-9"	1'-3"	2'-0"	2'-0"
	C	2'-0"	2'-0"	2'-6"	2'-9"	3'-0"	4'-0"
1/16	A	2'-0"	2'-0"	3'-4"	3'-8"	4'-0"	4'-4"
	B	1'-9"	1'-9"	2'-3"	2'-6"	2'-6"	2'-6"
	C	2'-6"	2'-6"	2'-8"	4'-0"	4'-0"	5'-6"
1/8	A	2'-6"	2'-6"	3'-0"	4'-0"	4'-6"	5'-2"
	B	2'-6"	2'-6"	2'-9"	3'-0"	3'-6"	4'-0"
	C	3'-0"	3'-0"	4'-0"	4'-6"	4'-9"	6'-6"

HORIZONTAL BEND

BEND		DIAMETER (D) 4"	6"	8"	10"	12"
1/32	A	8"	8"	8"	10"	12"
	B	7"	7"	8"	9"	10"
	C	7"	7"	7"	8"	8"
1/16	A	9"	9"	12"	1'-6"	1'-9"
	B	7"	7"	8"	9"	10"
	C	8"	8"	9"	10"	11"
1/8	A	1'-3"	1'-3"	1'-8"	2'-1"	2'-6"
	B	7"	7"	8"	9"	11"
	C	8"	8"	9"	10"	11"
1/4	A	2'-0"	2'-0"	2'-6"	3'-0"	3'-6"
	B	7"	7"	9"	12"	1'-3"
	C	2'-0"	2'-0"	1'-9"	1'-8"	1'-7"

TEE

D	4"	6"	8"	10"	12"
H	6"	7"	9"	10"	12"
I	8"	8"	10"	12"	1'-3"
J	7"	7"	9"	12"	1'-2"
K	6"	6"	8"	8"	8"

CAP

D	4"	6"	8"	10"	12"
E	6"	6"	8"	8"	10"
F	12"	12"	1'-4"	1'-8"	2'-0"
G	1'-5"	1'-5"	2'-0"	2'-5"	3'-0"

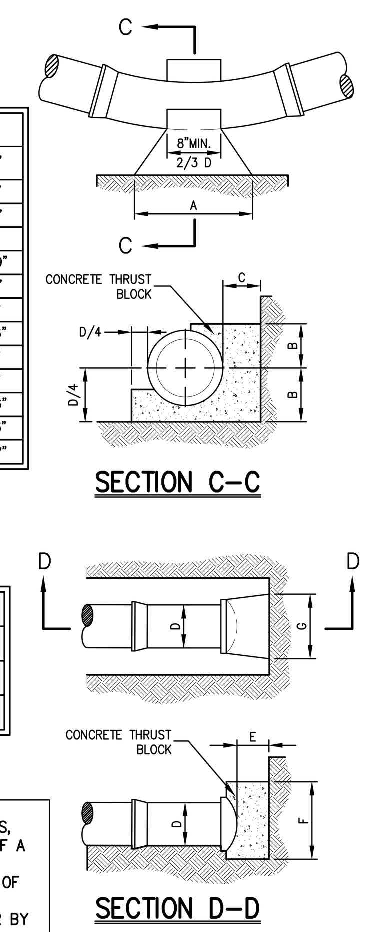

NOTES:
1. ALL CONCRETE TO BE CLASS A (4,000 PSI).
2. ALL ANCHOR AND THRUST BLOCKS TO BEAR ON UNDISTURBED EARTH.
3. IN ALL CASES SHOWN, MEASUREMENT "D" REFERS TO THE INSIDE PIPE DIAMETER.
4. ANCHOR AND THRUST BLOCK DIMENSIONS SHOWN ARE MINIMUM FOR 100 PSI WATER PRESSURE AND SOIL RESISTANCE OF 2 KIPS PER SQ FT. CONTRACTOR SHALL ADJUST FOR OTHER CONDITIONS AND SUBMIT FOR APPROVAL.

ANY ALTERATION OF PLANS, SPECIFICATIONS, PLATS AND REPORTS BEARING THE SEAL OF A LICENSED PROFESSIONAL ENGINEER OR LICENSED LAND SURVEYOR IS A VIOLATION OF SECTION 7209 OF THE NEW YORK STATE EDUCATION LAW, EXCEPT AS PROVIDED FOR BY SECTION 7209, SUBSECTION 2.

39 SEPARATION OF WATER AND SANITARY SEWER/STORM DRAIN LINES

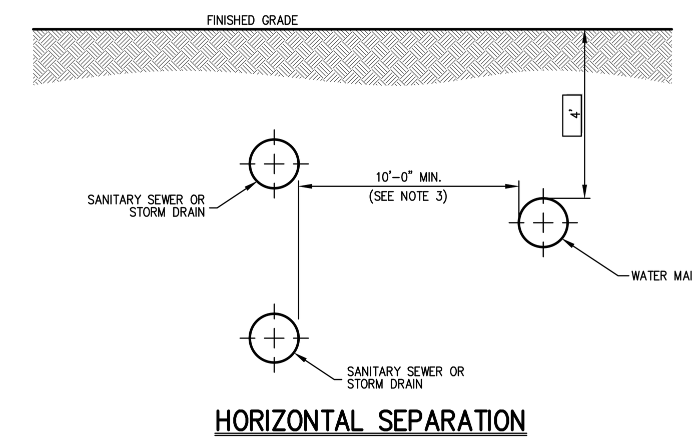

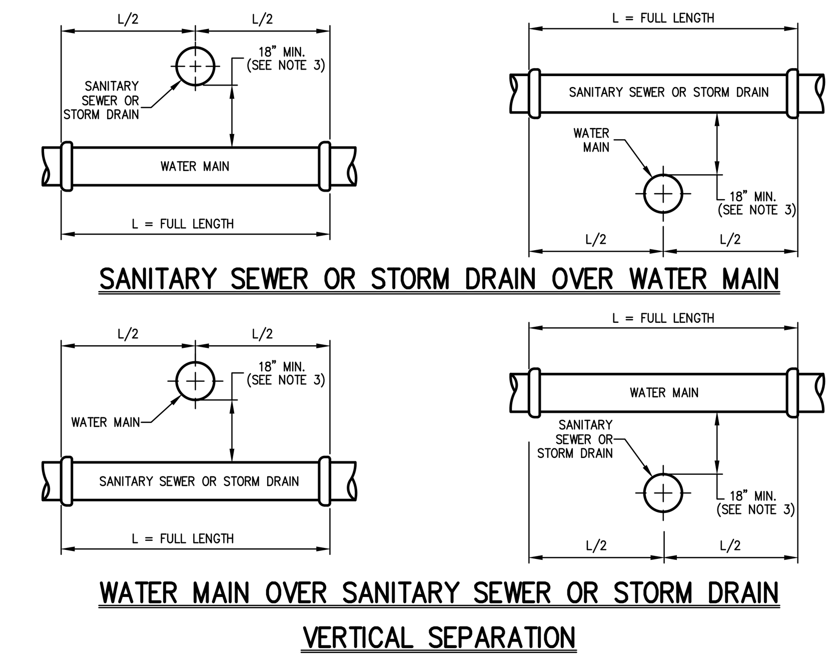

NOTES:
1. NORMAL CONDITIONS:
   A. WHENEVER A WATER MAIN MUST CROSS OVER OR UNDER A SANITARY SEWER OR STORM DRAIN, THE PIPES SHALL BE LAID TO PROVIDE A VERTICAL SEPARATION BETWEEN THEM OF AT LEAST 18 INCHES, AS MEASURED FROM THE BOTTOM OF THE HIGHER PIPE TO THE CROWN OF THE LOWER PIPE.
   B. FULL LENGTH OF WATER PIPE MUST BE CENTERED AT THE POINT OF CROSSING; NO JOINTS WILL BE PERMITTED AT THE POINT OF CROSSING.
2. WATER MAIN CROSSING UNDER SANITARY SEWERS:
   A. VERTICAL SEPARATION OF 18 INCHES MUST BE PROVIDED.
   B. ADEQUATE STRUCTURAL SUPPORT MUST BE PROVIDED FOR THE SANITARY SEWER TO PREVENT EXCESSIVE DEFLECTION OF JOINTS AND SETTLING.
   C. FULL LENGTH OF WATER PIPE MUST BE CENTERED AT THE POINT OF CROSSING; NO JOINTS WILL BE PERMITTED AT THE POINT OF CROSSING.
3. IF DURING CONSTRUCTION IT IS FOUND THAT THE REQUIRED SEPARATION OF WATER MAINS, SANITARY SEWERS, STORM SEWERS AND BUILDING SANITARY SEWERS CANNOT BE MET, THE CONTRACTOR OR HIS AUTHORIZED REPRESENTATIVE SHALL IN WRITING ADVISE JOHN MEYER CONSULTING OF THE SPECIFIC CONDITIONS ENCOUNTERED. APPROVAL OF ALTERNATIVE SEPARATION CRITERIA SHALL BE OBTAINED FROM THE CITY OF WHITE PLAINS AND WESTCHESTER COUNTY HEALTH DEPARTMENT PRIOR TO INSTALLATION.

40 VEGETATED SWALE

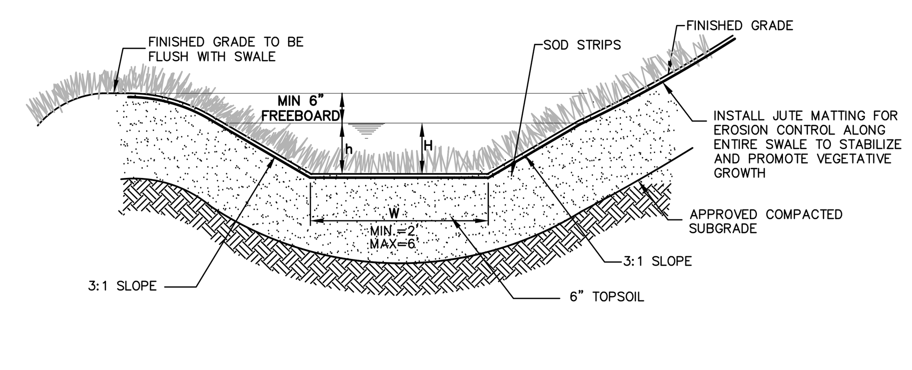

SWALE	WATER QUALITY STORM Q_{WQ} (cfs)	DISCHARGE 10Y EVENT Q_{10} (cfs)	AVERAGE SLOPE S (%)	BOTTOM WIDTH W (ft)	REQUIRED DEPTH h (ft)	PROVIDED DEPTH H (ft)	REQUIRED LENGTH I (ft)	PROVIDED LENGTH L (ft)
VS 1A-1	0.16	0.69	2.00	2.00	0.88	1.00	19	100
VS 1A-2	0.19	0.77	2.00	2.00	0.90	1.00	23	121
VS 1A-3	0.18	0.73	2.00	2.00	0.89	1.00	22	125
VS 1A-4	0.58	2.32	2.00	2.00	0.89	1.00	70	170

NOTES:
1. IMMEDIATELY AFTER GRADING OPERATIONS, THE GRASS SWALE SHALL BE STABILIZED WITH SOD CONTAINING A MIXTURE OF KENTUCKY BLUEGRASS, CREEPING RED FESCUE AND PERNNIAL RYEGRASS AT A RATE OF 25, 20 AND 10 POUNDS PER ACRE, RESPECTIVELY. WIDTH STRIPS OF LIVE GRASS. SOD SHALL BE CUT IN UNIFORM.
2. AREA ADJACENT TO SWALE TO BE BROUGHT TO FINISHED GRADE IMMEDIATELY AS REQUIRED, TOPSOILED, SEEDED AND MAINTAINED FOR EROSION CONTROL.

41 RIP-RAP OVERFLOW SPILLWAY

STRUCTURE CHART

BASIN No.	100 YEAR RUNOFF RATE (CFS)	EMERGENCY SPILLWAY (feet) LENGTH (A)	BREAD (B)	ELEV. (C)	TOP EMBANKMENT (feet) EMBAN. (D)	ELEV. (E)
1A	149.59	200.0	10.0	266.10	6.0	266.60

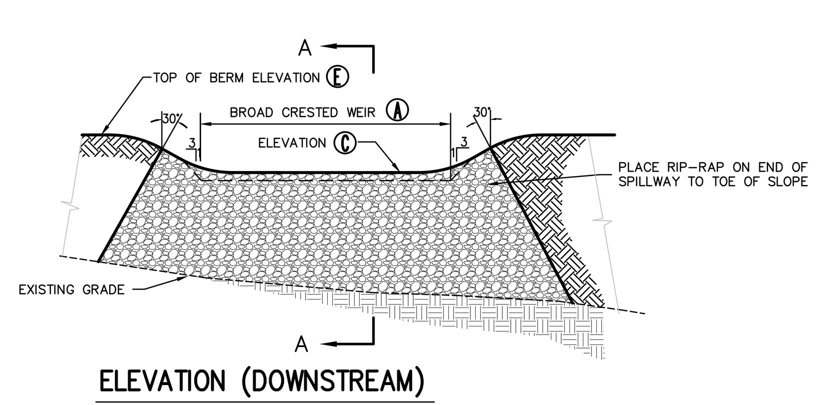

SPECIFICATION FOR BERM CONSTRUCTION

SURFACE OF AREA TO RECEIVE FILL SHOULD BE STRIPPED OF SURFACE TOPSOIL, BRUSH, ETC., PRIOR TO ANY FILL PLACEMENT.

EMBANKMENT FILL TO BE SPREAD IN MAXIMUM 12-INCH THICK LIFTS AND COMPACTED TO 95 PERCENT OF MODIFIED PROCTOR DENSITY (ASTM 1557) AT PLUS OR MINUS 2 PERCENT OF OPTIMUM MOISTURE CONTENT.

FILL CONSTRUCTION TO BE DONE UNDER THE INSPECTION OF A QUALIFIED SOILS ENGINEER. IN-PLACE FIELD DENSITY TESTS SHOULD BE DONE ON EACH LIFT TO DETERMINE THAT THE SPECIFICATIONS ARE BEING MET.

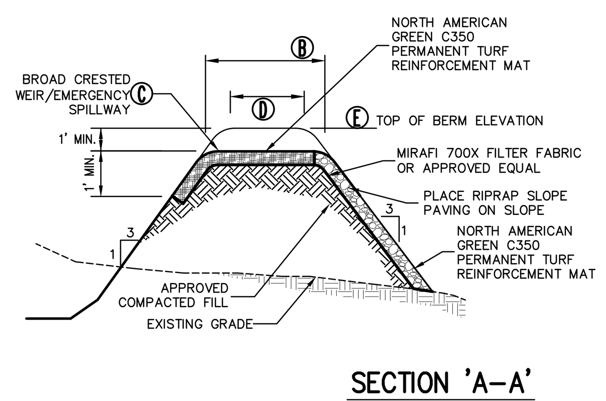

42 BYPASS MANHOLE B-5

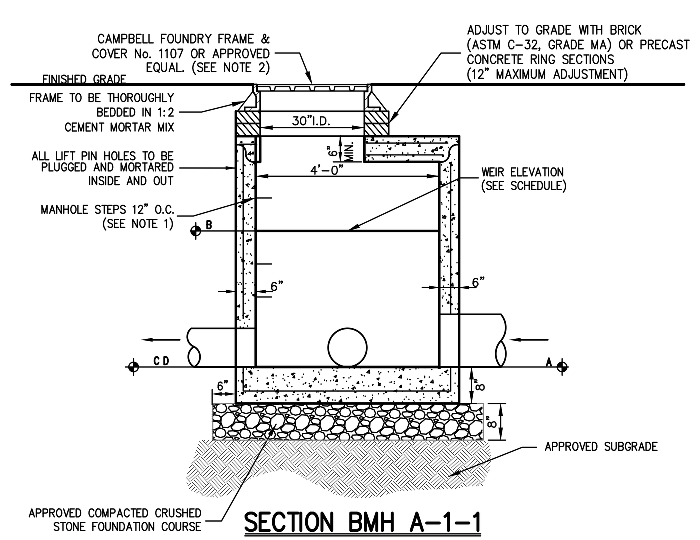

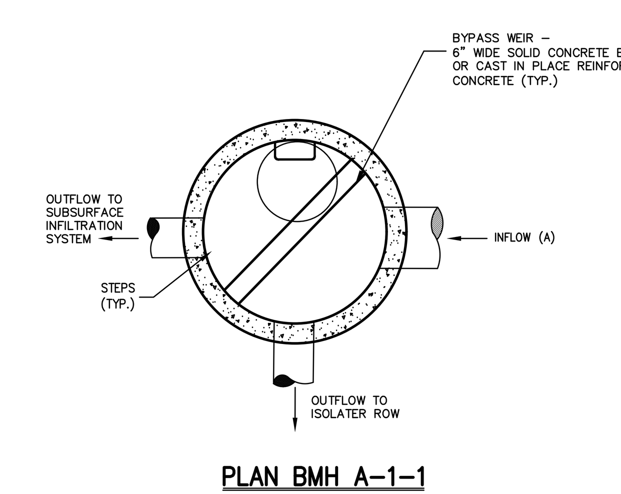

NOTES:
1. MANHOLE STEPS SHALL BE CAST IRON NEENAH No. R-1981-0 OR CAMPBELL FOUNDRY No. 2588-1 OR POLYPROPYLENE COATED STEEL (SEE SPECIFICATIONS) OR APPROVED EQUAL.
2. UNLESS OTHERWISE SPECIFIED, STORM DRAIN MANHOLES SHALL HAVE LETTERS "DRAIN" CAST ON COVER, THE COVERS SHALL HAVE VENT HOLES.
3. MANHOLES SHALL MEET OR EXCEED A.S.T.M. AND O.S.H.A. REQUIREMENTS.
4. SEE "NOTES PERTAINING TO MANHOLES" UNDER "UTILITY NOTES" ON DRAWING SP-21.
5. BYPASS MANHOLE SHALL BE MANUFACTURED IN ACCORDANCE WITH ALL APPLICABLE LOCAL STANDARDS. THIS BYPASS MANHOLE HAS BEEN DESIGNED TO FUNCTION WITH THE VORTECHS UNIT. IF THE MANHOLE DIFFERS FROM WHAT IS SHOWN OWNERS FILED REPRESENTATIVE AND SITE ENGINEER MUST BE ADVISED SO THAT ALL LENGTHS AND ELEVATIONS CAN BE RECALCULATED, IF NECESSARY.
6. O-RING JOINTS TO CONFORM TO A.S.T.M. DESIGNATION C443 LATEST REVISION. JOINTS TO BE MORTARED INSIDE AND OUT USING NON-SHRINKING MORTAR
7. PRECAST MANHOLE SECTIONS TO BE IN ACCORDANCE WITH "PRECAST REINFORCED CONCRETE MANHOLE SECTIONS" A.S.T.M. DESIGNATION C-478, LATEST REVISION, MINIMUM COMPRESSIVE STRENGTH TO BE 4000 P.S.I.

SCHEDULE OF INVERTS AND ELEVATIONS

BYPASS STRUCTURE	A SIZE	A INVERT	B WEIR 1 LENGTH	B WEIR 1 ELEVATION	C SIZE	C INVERT	D SIZE	D INVERT
BMH B-5	24" HDPE	265	4'	266	12" HDPE	265	12" HDPE	265

43 UTILITY TRENCH

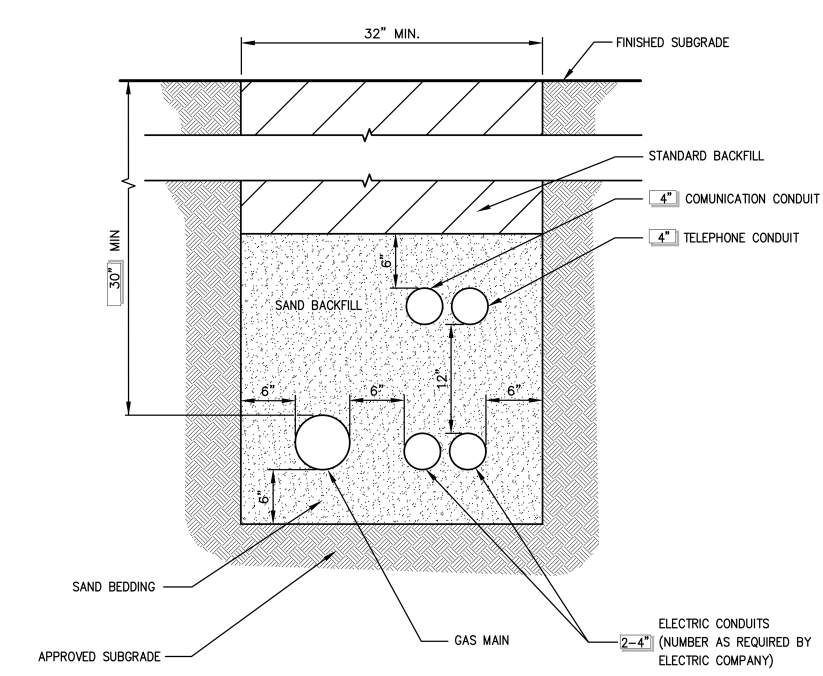

NOTES:
1. UTILITIES TO BE INSTALLED IN ACCORDANCE WITH THE REGULATIONS AND REQUIREMENTS OF THE UTILITY COMPANY HAVING JURISDICTION.
2. BACKFILL FOR PIPE AND CONDUIT SHALL BE PLACED EVENLY AND CAREFULLY AROUND AND OVER THE PIPE OR CONDUIT IN SIX (6) INCH MAXIMUM LAYERS. EACH LAYER SHALL BE THOROUGHLY AND CAREFULLY COMPACTED UNTIL TWELVE (12) INCHES OF COVER EXISTS OVER THE PIPE OR CONDUIT. THE REMAINDER OF THE BACKFILL MAY THEN BE PLACED AND COMPACTED IN A MAXIMUM OF TWELVE (12) INCH LAYERS. EACH LAYER SHALL BE COMPACTED BY APPROVED MECHANICAL TAMPING MACHINES. UNLESS OTHERWISE SPESIFIED BACKFILL SHALL BE COMPACTED TO NOT LESS THAN 92% MAXIMUM MODIFIED DENSITY IN ACCORDANCE WITH ASTM DESIGNATION D-1557 IN THE MANNER HEREIN DESCRIBED. BACKFILL SHALL PROCEED UP TO THE LINES AND GRADES AS SHOWN ON THE DRAWINGS.

44 SITE PAVEMENT (Light Duty)

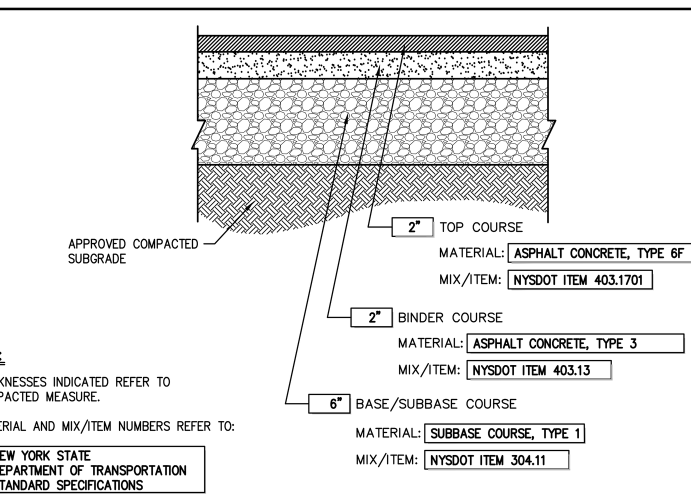

2" TOP COURSE
MATERIAL: ASPHALT CONCRETE, TYPE 6F
MIX/ITEM: NYSDOT ITEM 403.1701

2" BINDER COURSE
MATERIAL: ASPHALT CONCRETE, TYPE 3
MIX/ITEM: NYSDOT ITEM 403.13

6" BASE/SUBBASE COURSE
MATERIAL: SUBBASE COURSE, TYPE 1
MIX/ITEM: NYSDOT ITEM 304.11

NOTES:
THICKNESSES INDICATED REFER TO COMPACTED MEASURE.
MATERIAL AND MIX/ITEM NUMBERS REFER TO:
NEW YORK STATE DEPARTMENT OF TRANSPORTATION STANDARD SPECIFICATIONS

45 SITE PAVEMENT (Heavy Duty)

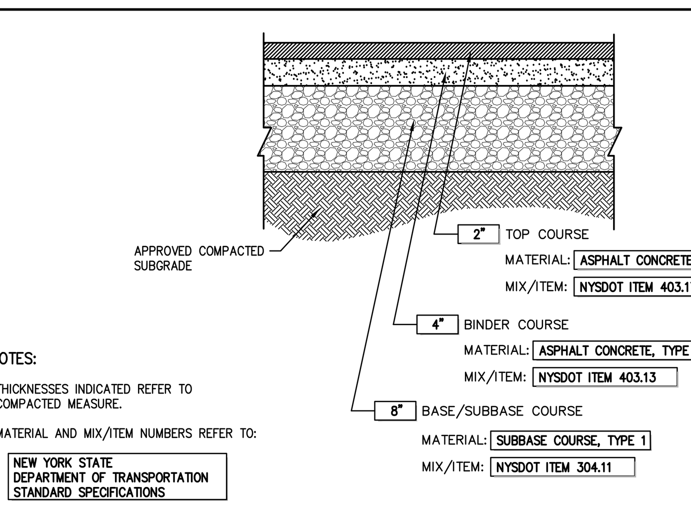

2" TOP COURSE
MATERIAL: ASPHALT CONCRETE, TYPE 6F
MIX/ITEM: NYSDOT ITEM 403.1701

4" BINDER COURSE
MATERIAL: ASPHALT CONCRETE, TYPE 3
MIX/ITEM: NYSDOT ITEM 403.13

8" BASE/SUBBASE COURSE
MATERIAL: SUBBASE COURSE, TYPE 1
MIX/ITEM: NYSDOT ITEM 304.11

NOTES:
1. THICKNESSES INDICATED REFER TO COMPACTED MEASURE.
2. MATERIAL AND MIX/ITEM NUMBERS REFER TO:
NEW YORK STATE DEPARTMENT OF TRANSPORTATION STANDARD SPECIFICATIONS

46 PAVEMENT REPLACEMENT OVER TRENCH

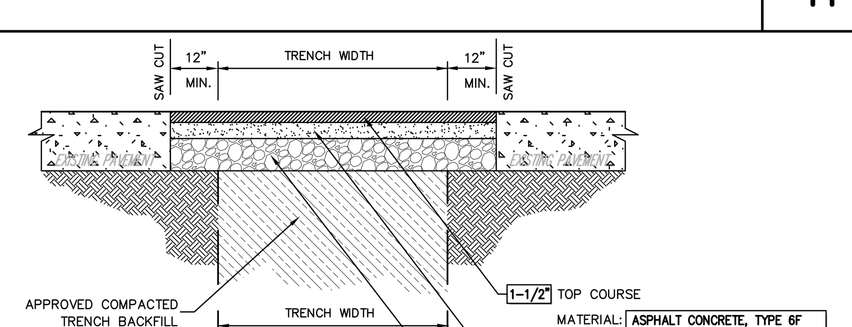

1-1/2" TOP COURSE
MATERIAL: ASPHALT CONCRETE, TYPE 6F
MIX/ITEM: NYSDOT ITEM 403.1701

2-1/2" BINDER COURSE
MATERIAL: ASPHALT CONCRETE, TYPE 3
MIX/ITEM: NYSDOT ITEM 403.13

MATCH SUBBASE/BASE COURSE (MINIMUM 6" THICK)
MATERIAL: SUBBASE TYPE 4
MIX/ITEM: NYSDOT ITEM 304.05

NOTES:
1. THICKNESSES INDICATED REFER TO COMPACTED MEASURE.
2. ITEM NUMBERS REFER TO:
NEW YORK STATE DEPARTMENT OF TRANSPORTATION STANDARD SPECIFICATIONS

48 CONCRETE PAD

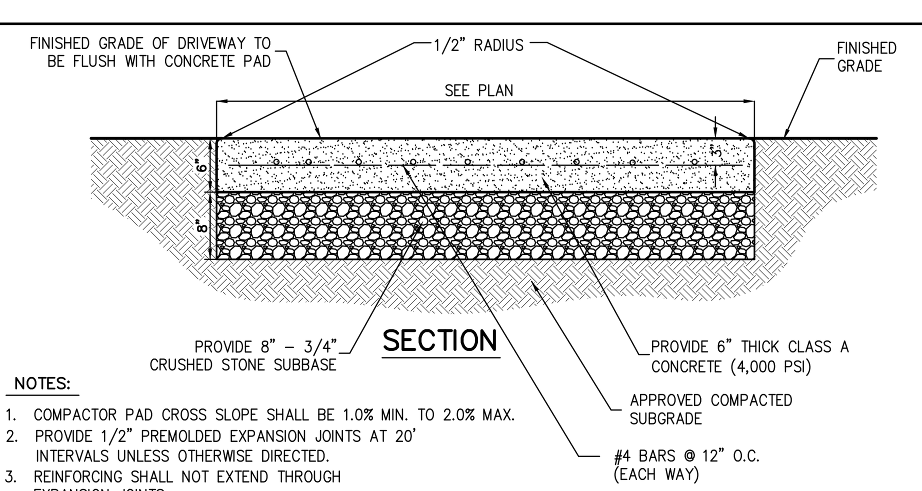

NOTES:
1. COMPACTOR PAD CROSS SLOPE SHALL BE 1.0% MIN. TO 2.0% MAX.
2. PROVIDE 1/2" PREMOLDED EXPANSION JOINTS AT 20' INTERVALS UNLESS OTHERWISE DIRECTED.
3. REINFORCING SHALL NOT EXTEND THROUGH EXPANSION JOINTS.
4. COMPACTOR PAD SHALL HAVE LIGHT BROOM FINISH.

50 MOUNTABLE CURB

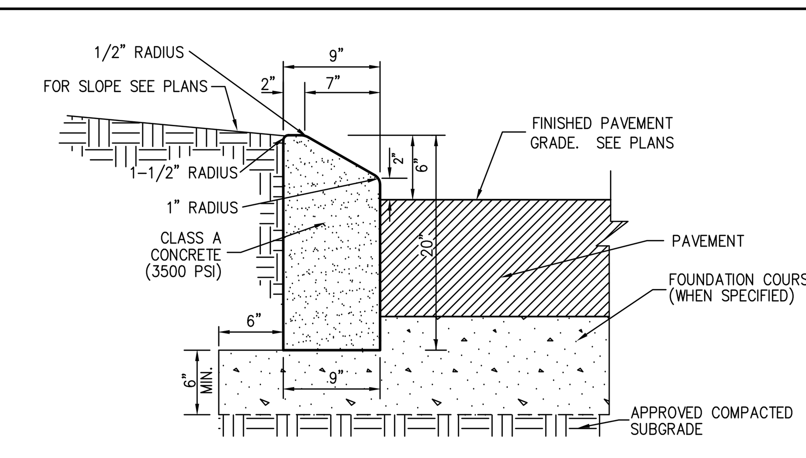

52 CONCRETE CURB ENDING

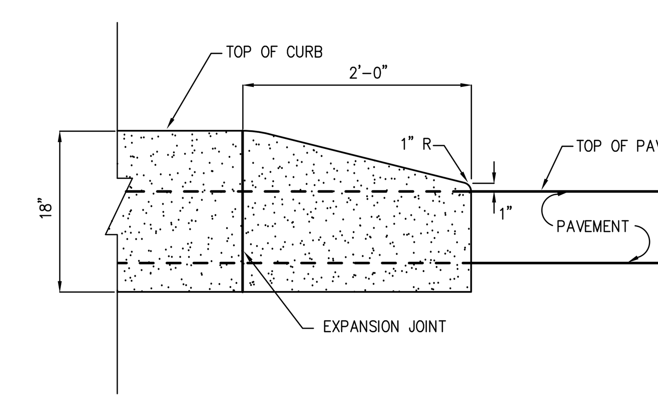

47 STANDARD BIKE PATH

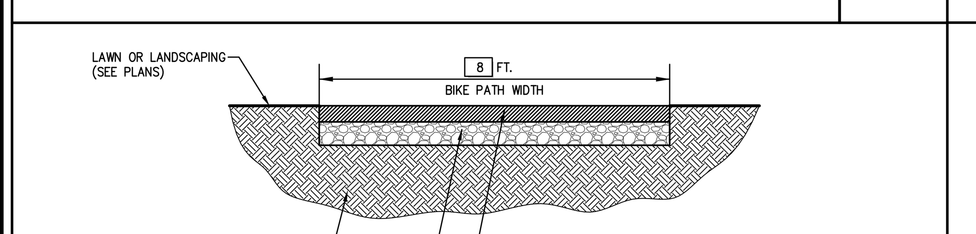

2" TOP COURSE
MATERIAL: ASPHALT CONCRETE, TYPE 6F
MIX/ITEM: NYSDOT ITEM 403.1701

6" BASE/SUBBASE COURSE
MATERIAL: SUBBASE, TYPE 4
MIX/ITEM: NYSDOT ITEM 304.05

NOTES:
1. THICKNESSES INDICATED REFER TO COMPACTED MEASURES.
2. SEE SITE PLANS FOR BIKE PATH SLOPES.
3. MATERIAL AND MIX/ITEM NUMBERS REFER TO:
NEW YORK STATE DEPARTMENT OF TRANSPORTATION STANDARD SPECIFICATIONS

49 GRAVEL AREA

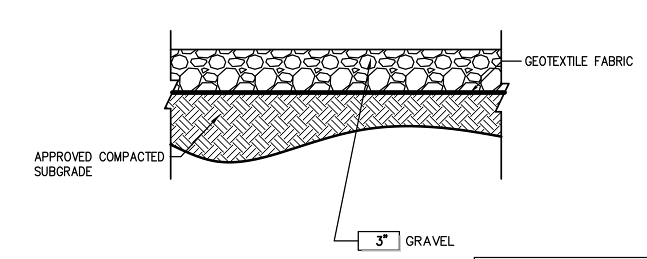

3" GRAVEL
MATERIAL: 3/16" TO 3/8" ANGULAR GRAVEL

NOTES:
1. THICKNESSES INDICATED REFER TO COMPACTED MEASURE.
2. MATERIAL AND MIX/ITEM NUMBERS REFER TO:
NEW YORK STATE DEPARTMENT OF TRANSPORTATION STANDARD SPECIFICATIONS

51 CAST-IN-PLACE CONCRETE CURB

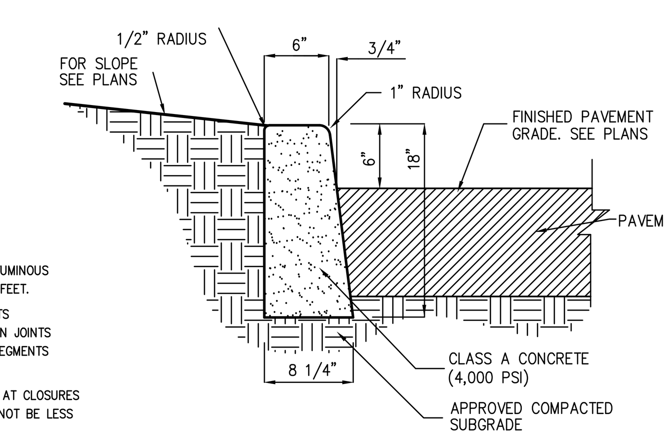

NOTES:
1. INSTALL 1/2" PREMOLDED BITUMINOUS EXPANSION JOINT EVERY 20 FEET.
2. INSTALL CONSTRUCTION JOINTS MID-WAY BETWEEN EXPANSION JOINTS SO THAT LENGTH OF CURB SEGMENTS WILL BE TEN (10) FEET.
3. LENGTH OF CURB SEGMENTS AT CLOSURES MAY BE VARIED BUT SHALL NOT BE LESS THAN FOUR (4) FEET.
4. WHEN INSTALLED ADJACENT TO SIDEWALK OR CONCRETE PAVEMENT, MATCH EXPANSION JOINTS.

53 CAST-IN-PLACE CONCRETE CURB (IN EXISTING PAVEMENT)

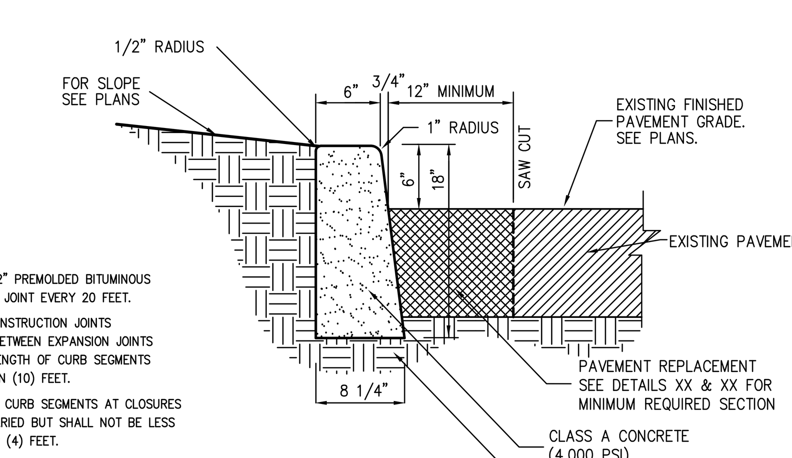

NOTES:
1. INSTALL 1/2" PREMOLDED BITUMINOUS EXPANSION JOINT EVERY 20 FEET.
2. INSTALL CONSTRUCTION JOINTS MID-WAY BETWEEN EXPANSION JOINTS SO THAT LENGTH OF CURB SEGMENTS WILL BE TEN (10) FEET.
3. LENGTH OF CURB SEGMENTS AT CLOSURES MAY BE VARIED BUT SHALL NOT BE LESS THAN FOUR (4) FEET.
4. WHEN INSTALLED ADJACENT TO SIDEWALK OR CONCRETE PAVEMENT, MATCH EXPANSION JOINTS.

54 MONOLITHIC CONCRETE CURB AND SIDEWALK

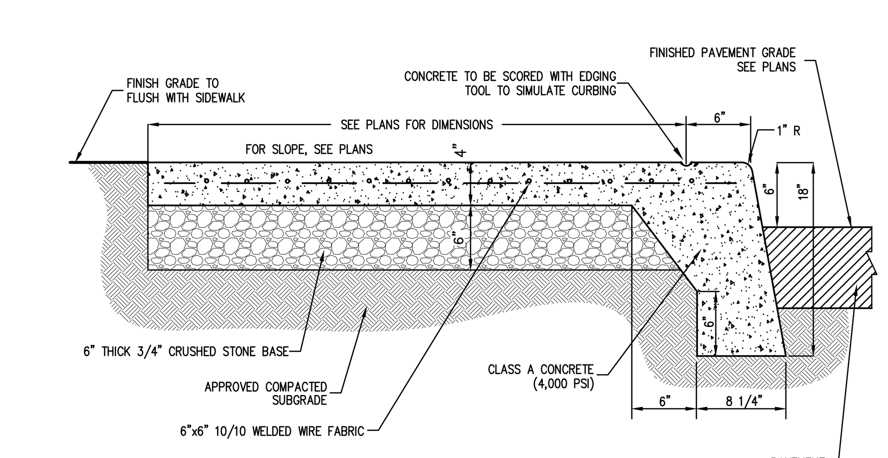

ANY ALTERATION OF PLANS, SPECIFICATIONS, PLATS AND REPORTS BEARING THE SEAL OF A LICENSED PROFESSIONAL ENGINEER OR LICENSED LAND SURVEYOR IS A VIOLATION OF SECTION 7209 OF THE NEW YORK STATE EDUCATION LAW, EXCEPT AS PROVIDED FOR BY SECTION 7209, SUBSECTION 2.

NOTES:
1. SIDEWALK CROSS SLOPE SHALL BE 1% MIN. TO 2% MAX.

NO.	REVISION	DATE	BY
1.	SITE PLAN SUBMISSION	05/19/2014	CS
2.	REVISED PER CITY COMMENTS	10/20/2014	CS
3.	REVISED PER CITY COMMENTS	12/10/2014	CS
4.	REVISED PER CITY COMMENTS	03/17/2015	CS
5.	REVISED PER CITY COMMENTS	05/01/2015	CS
6.	REVISED PER CITY COMMENTS	05/15/2015	CS
7.	SITE PLAN SUBMISSION	10/31/2016	CS

Previous Editions Obsolete

APPLICANT/OWNER:
FRENCH-AMERICAN SCHOOL OF NEW YORK
525 FENIMORE ROAD
MAMARONECK, NY 10543

ARCHITECT:
STANTEC
400 MORGAN CENTER
101 EAST DIAMOND STREET
BUTLER, PA 16001-5923

JMC Planning, Engineering, Landscape Architecture & Land Surveying, PLLC
JMC Site Development Consultants, LLC
John Meyer Consulting, Inc.
120 BEDFORD ROAD • ARMONK, NY 10504
voice 914.273.5225 • fax 914.273.2102
www.jmcpllc.com
JMC

CONSTRUCTION DETAILS

FRENCH-AMERICAN SCHOOL OF NEW YORK
336 RIDGEWAY
CITY OF WHITE PLAINS, NEW YORK

DRAWN: CS	APPROVED: RR
SCALE: N.T.S.	
DATE: 09/29/2014	
PROJECT No: 10170	
DWG: 10170-DETAILS	TAB: DET-04 SP / LS: --
DRAWING No: SP-15	

COPYRIGHT © 2016 by JMC. All Rights Reserved. No part of this document may be reproduced, stored in a retrieval system, or transmitted in any form or by means, electronic, mechanical, photocopying, recording or otherwise, without the prior written permission of JMC PLANNING, ENGINEERING, LANDSCAPE ARCHITECTURE & LAND SURVEYING, PLLC | JMC SITE DEVELOPMENT CONSULTANTS, LLC | JOHN MEYER CONSULTING, INC. (JMC). Any modifications or alterations to this document without the written permission of JMC shall render them invalid and unusable.

NOT FOR CONSTRUCTION

NOT FOR CONSTRUCTION

COPYRIGHT © 2016 by JMC. All Rights Reserved. No part of this document may be reproduced, stored in a retrieval system, or transmitted in any form or by means, electronic, mechanical, photocopying, recording or otherwise, without the prior written permission of JMC PLANNING, ENGINEERING, LANDSCAPE ARCHITECTURE & LAND SURVEYING, PLLC | JMC SITE DEVELOPMENT CONSULTANTS, LLC | JOHN MEYER CONSULTING, INC. (JMC). Any modifications or alterations to this document without the written permission of JMC shall render them invalid and unusable.

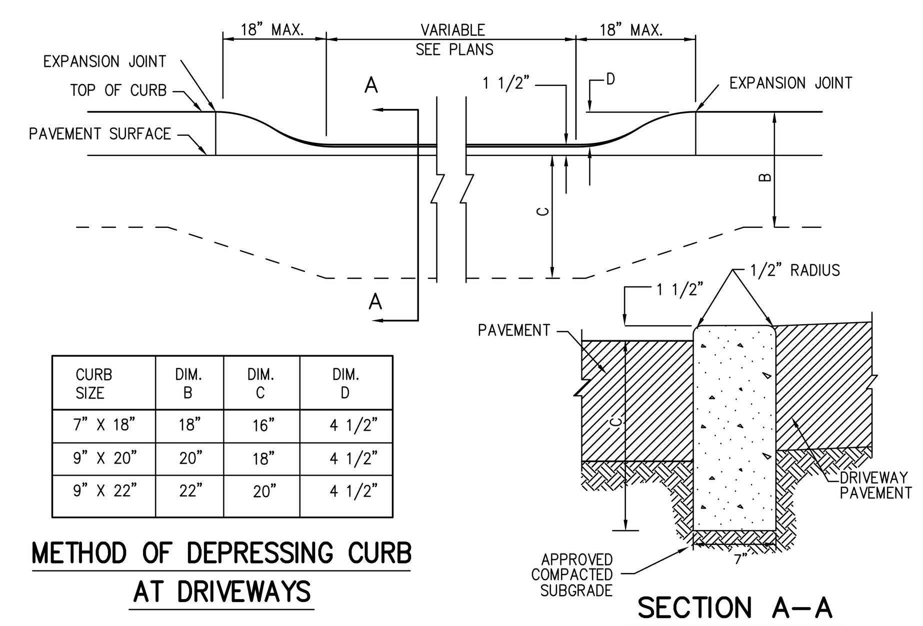

CURB SIZE	DIM. B	DIM. C	DIM. D
7" X 18"	18"	16"	4 1/2"
9" X 20"	20"	18"	4 1/2"
9" X 22"	22"	20"	4 1/2"

METHOD OF DEPRESSING CURB AT DRIVEWAYS

SECTION A–A

ANY ALTERATION OF PLANS, SPECIFICATIONS, PLATS AND REPORTS BEARING THE SEAL OF A LICENSED PROFESSIONAL ENGINEER OR LICENSED LAND SURVEYOR IS A VIOLATION OF SECTION 7209 OF THE NEW YORK STATE EDUCATION LAW, EXCEPT AS PROVIDED FOR BY SECTION 7209, SUBSECTION 2.

DEPRESSED CONCRETE CURB — 55

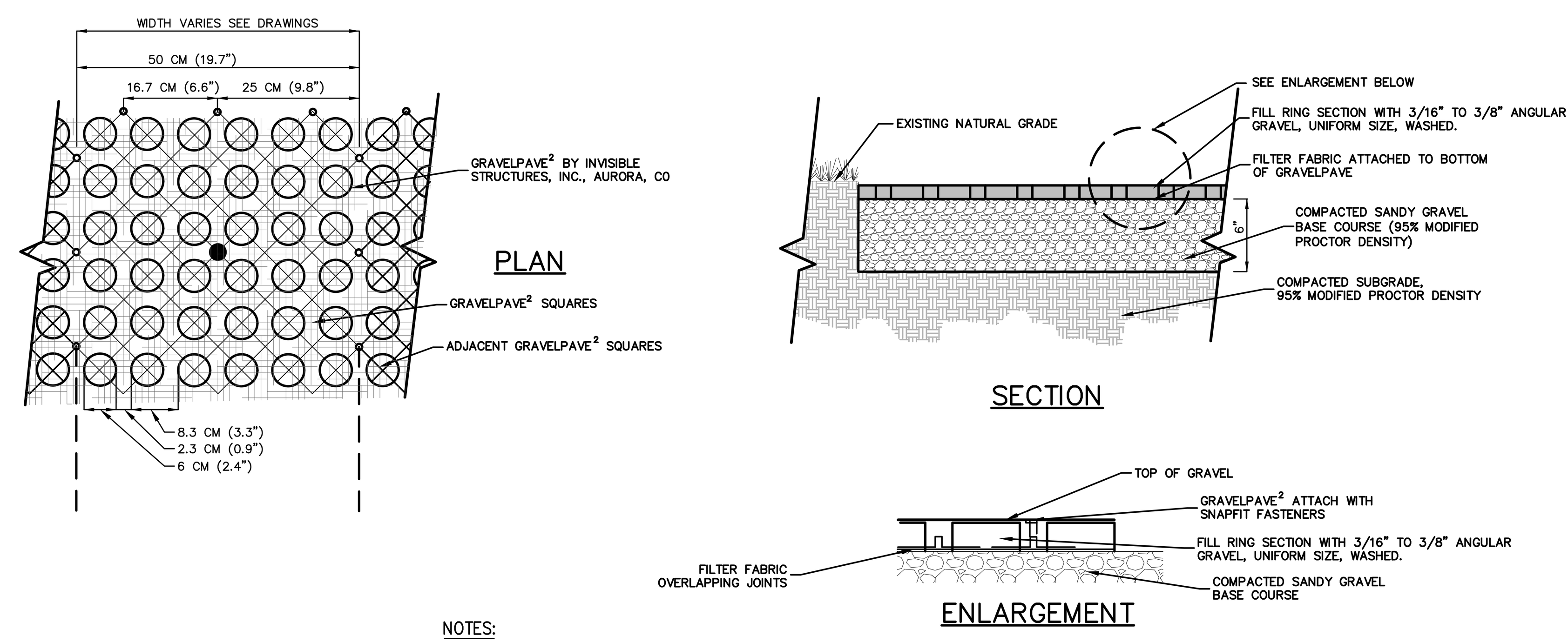

NOTES:

1. INSTALL AS PER MANUFACTURER'S TECHNICAL SPECIFICATIONS AND INSTALLATION PROCEDURES.
2. PREPARE SUBGRADE AS PER MANUFACTURER'S TECHNICAL SPECIFICATIONS.
3. GRAVEL PAVERS TO WITHSTAND HS–20 LOADING.
4. GRAVEL SURFACE TO BE INSTALLED IN ACCORDANCE WITH MANUFACTURER'S REQUIREMENTS TO MEET ADA REQUIREMENTS.
5. EDGING TO BE INSTALLED ALONG ALL STONE PAVE EDGES. STONE PAVE EDGING TO BE INSTALLED IN ACCORDANCE WITH THE MANUFACTURER'S REQUIREMENTS.

GRAVEL PAVE 2 — 56

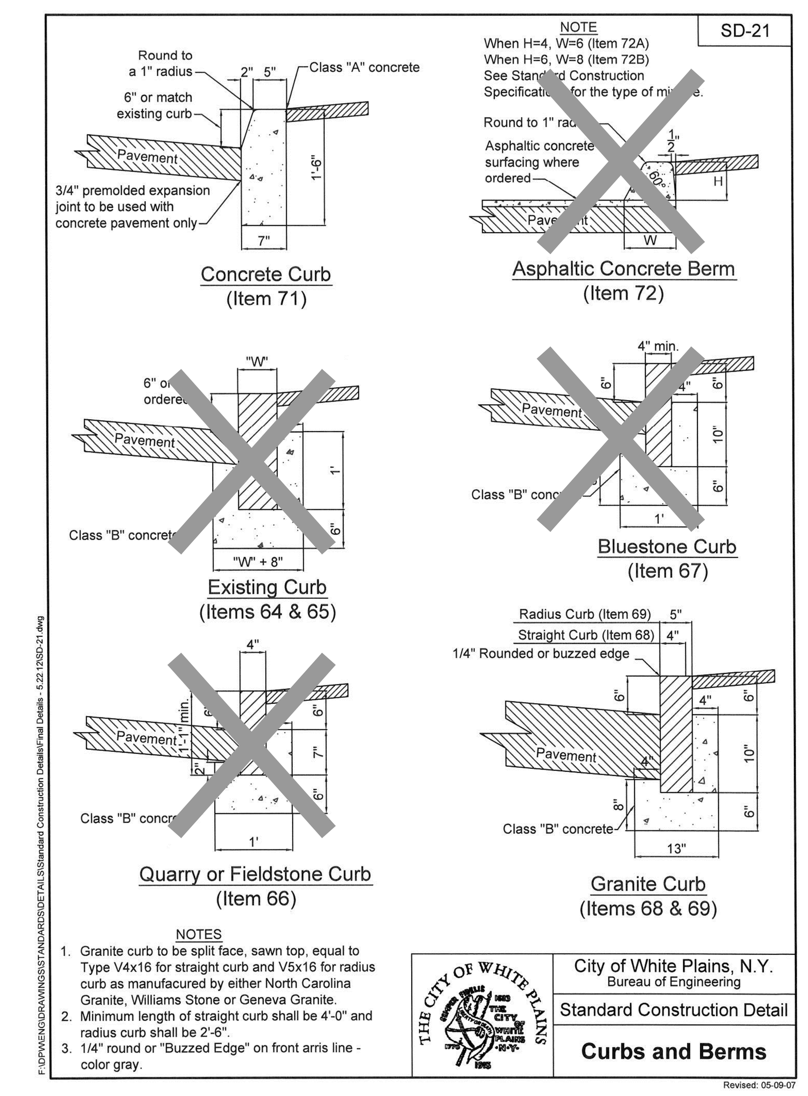

CONCRETE & GRANITE CURB — 57
(CITY OF WHITE PLAINS STANDARD DETAIL)

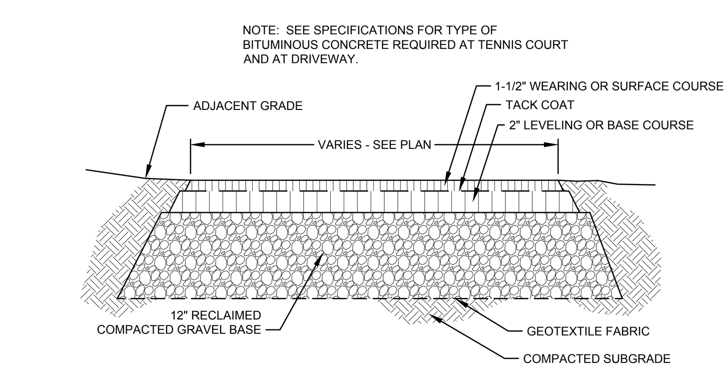

TENNIS COURT PAVING — 58

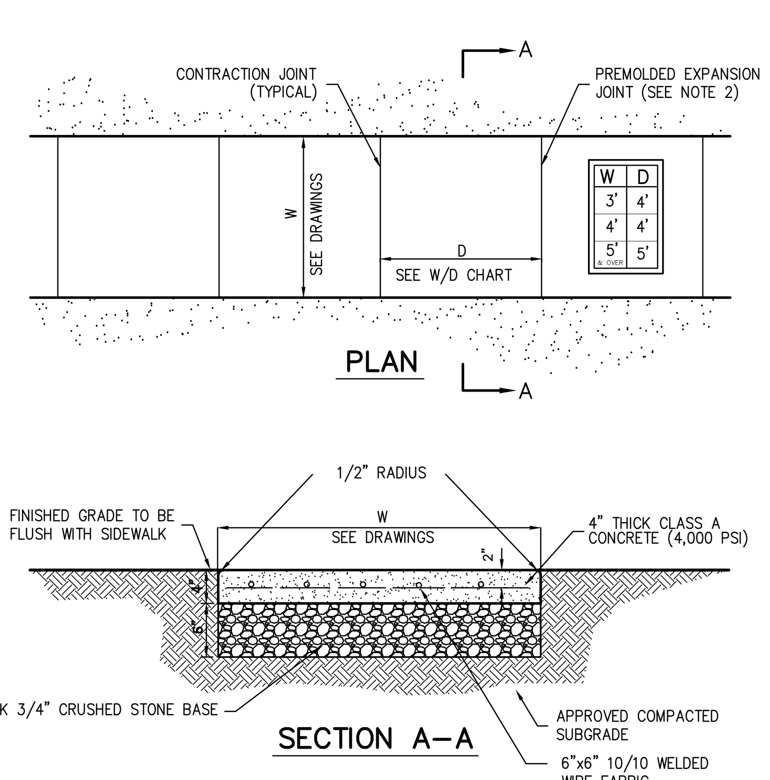

W	D
3'	4'
4'	4'
5' & OVER	5'

NOTES:

1. SIDEWALK CROSS SLOPE SHALL BE 1% MIN. TO 2% MAX.
2. PROVIDE 1/2" PREMOLDED EXPANSION JOINTS AT 20' INTERVALS UNLESS OTHERWISE DIRECTED.
3. REINFORCING SHALL NOT EXTEND THROUGH EXPANSION JOINTS.
4. SIDEWALK SHALL HAVE LIGHT BROOM FINISH

CONCRETE SIDEWALK — 59

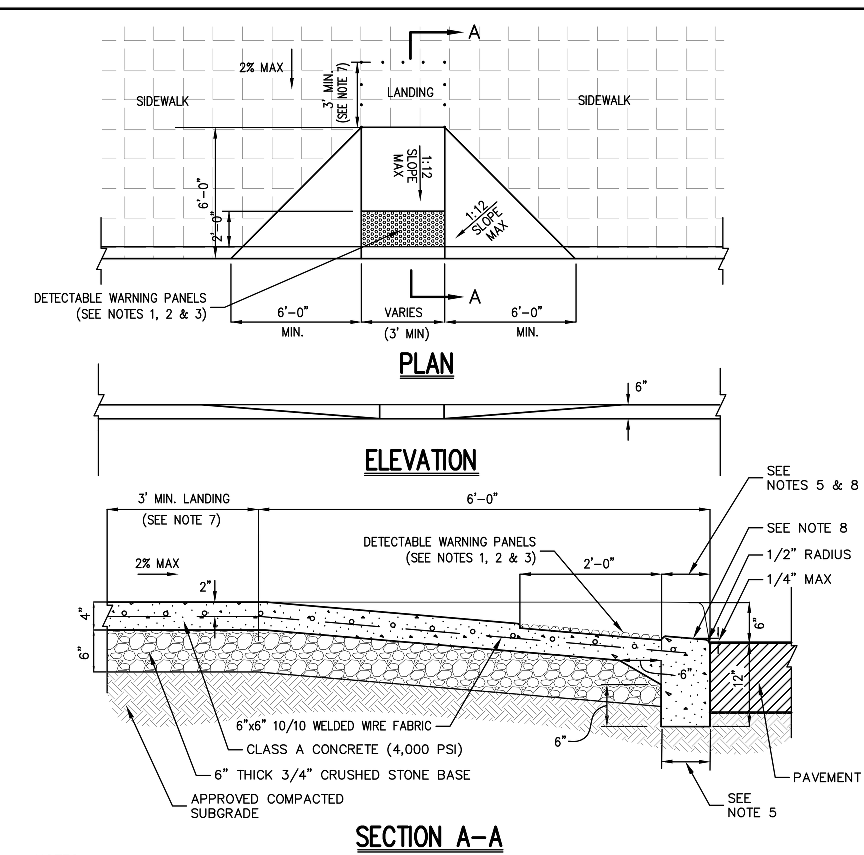

NOTES:

1. RAMPS SHALL HAVE CAST IN PLACE DETECTABLE/TACTILE WARNING SURFACE TILES AS MANUFACTURED BY ARMOR–TILE (OR APPROVED EQUAL) AND SHALL CONSIST OF RAISED TRUNCATED DOMES WITH A DIAMETER OF NOMINAL 0.9 INCHES, A HEIGHT OF NOMINAL 0.2 INCHES AND A CENTER TO CENTER SPACING OF NOMINAL 2.35 INCHES.
2. DETECTABLE WARNING PANELS SHALL CONTRAST VISUALLY WITH ADJOINING SURFACES, EITHER LIGHT–ON–DARK OR DARK–ON–LIGHT IN ACCORDANCE WITH SECTION 4.29.2, FEDERAL REGISTER, VOLUME 56, NO. 144, RULES AND REGULATIONS, APPENDIX A TO PART 36 – STANDARDS FOR ACCESSIBLE DESIGN (AMERICANS WITH DISABILITIES ACT), LATEST EDITION.
3. 24" WIDTH OF PANELS TO BE INSTALLED DIRECTLY BEHIND CURB AND IN ACCORDANCE WITH MANUFACTURER'S SPECIFICATIONS.
4. A MINIMUM OF 3 FEET CLEAR SHALL BE MAINTAINED AT ANY PERMANENT OBSTACLE IN ACCESSIBLE ROUTE (I.E., HYDRANTS, UTILITY POLES, TREE WELLS, SIGNS, ETC.).
5. CURB TREATMENT VARIES, SEE PLANS FOR CURB TYPE AND SEE CURB DETAIL FOR DIMENSIONS.
6. RAMP, CURB AND ADJACENT PAVEMENTS SHALL BE GRADED TO PREVENT PONDING.
7. WHEN LANDING OF RAMP ADJOINS A DOORWAY THEN THE MINIMUM DOORWAY MANEUVERING AREA SHALL BE AT LEAST THE WIDTH OF THE DOORWAY AND SHALL HAVE A MINIMUM DEPTH OF:
   MANUAL SWING DOORS = 60" MIN.
   FULL POWERED AUTOMATIC SLIDING DOORS = 48" MIN.
8. CONTRACTOR TO ENSURE TOP OF CURB MATCHES SLOPE OF RAMP.

DROP CURB & RAMP — 60

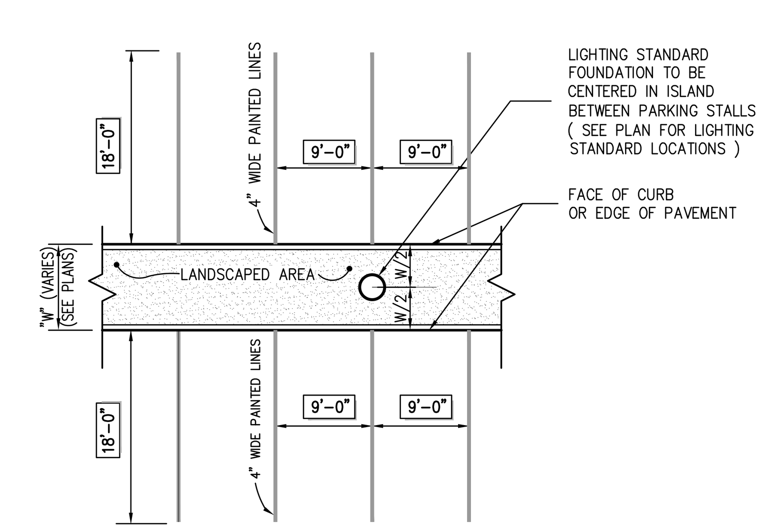

NOTES:

1. COLOR OF PAINT SHALL BE WHITE.

90° PARKING — 61
(SINGLE STRIPING - CURBED ISLAND)

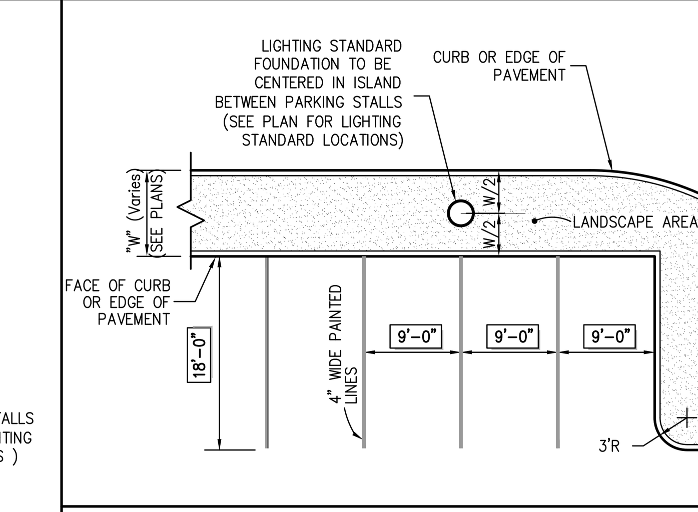

NOTES

1. COLOR OF PAINT SHALL BE WHITE.
2. OUTSIDE RADIUS MAY VARY DEPENDING ON SHAPE OF ISLAND. RADIUS SHALL BE AS SHOWN ON LAYOUT PLAN.

90° PARKING — 62
(SINGLE STRIPING - CURBED ISLAND AND CURBED END)

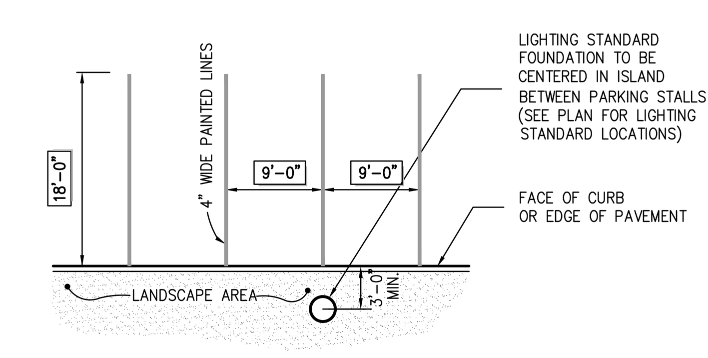

NOTE

1. COLOR OF PAINT SHALL BE WHITE

90° PARKING — 63
(SINGLE STRIPING - CURBED PERIMETER)

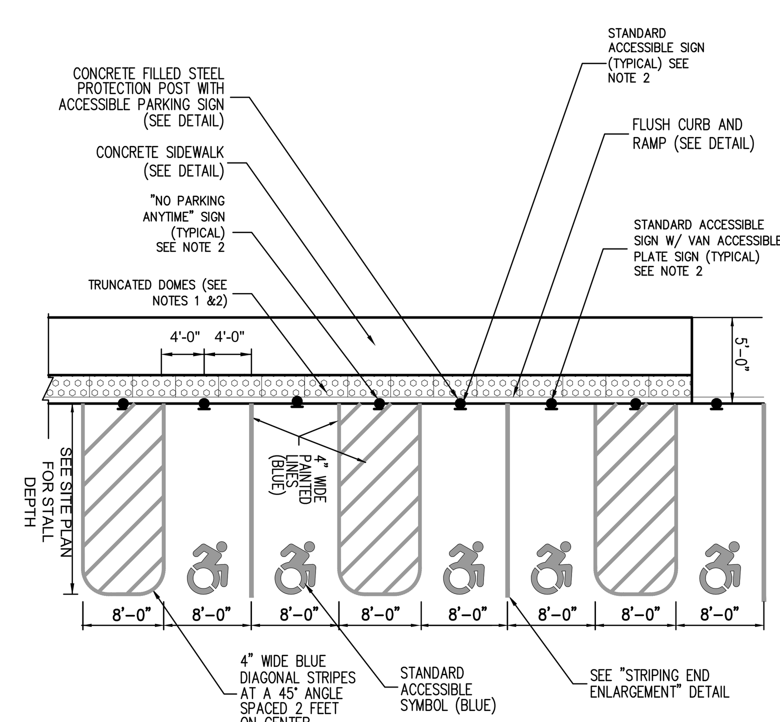

NOTES:

1. RAMPS AND SIDE RAMPS SHALL HAVE DETECTABLE WARNINGS CONSISTING OF RAISED TRUNCATED DOMES WITH A DIAMETER OF NOMINAL 0.9 INCHES, A HEIGHT OF NOMINAL 0.2 INCHES AND A CENTER TO CENTER SPACING OF NOMINAL 2.35 INCHES.
2. THEY SHALL CONTRAST VISUALLY WITH ADJOINING SURFACES, EITHER LIGHT–ON–DARK OR DARK–ON–LIGHT IN ACCORDANCE WITH SECTION 4.29.2, FEDERAL REGISTER, VOLUME 56, NO. 144, RULES AND REGULATIONS, APPENDIX A TO PART 36 – STANDARDS FOR ACCESSIBLE DESIGN (AMERICANS WITH DISABILITIES ACT), DATED JULY 26, 1991 AND SUBSEQUENT REVISIONS.
3. SLOPES IN ACCESSIBLE PARKING AREAS SHALL NOT EXCEED 2%.
4. SEE SITE PLANS/SIGN TABLE FOR SIGN DESIGNATIONS, LOCATIONS AND SPECIFICATIONS.

ACCESSIBLE PARKING — 64
SINGLE STRIPING - CURBLINE ALIGNMENT - W/SIDEWALK) (NEW YORK)

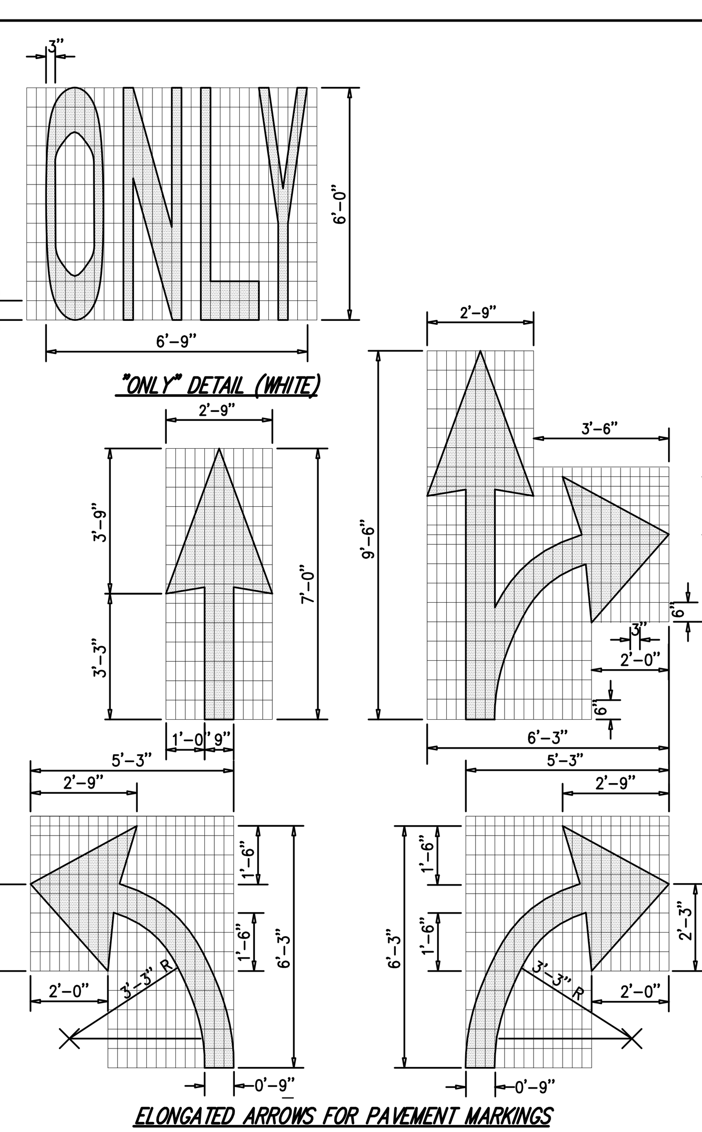

PAVEMENT TEXT & ARROWS — 65

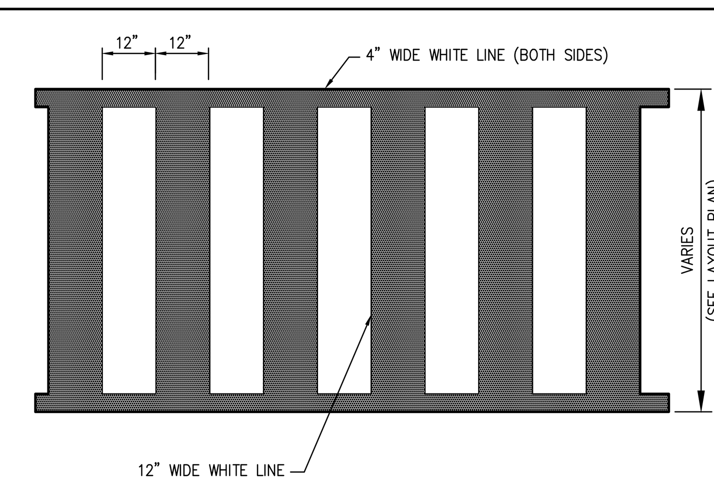

PEDESTRIAN CROSSING — 66

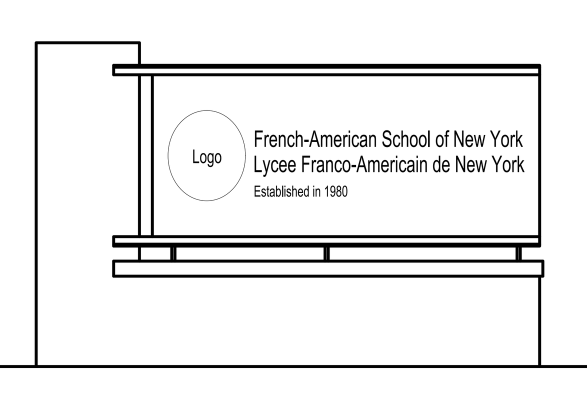

FRENCH–AMERICAN SCHOOL OF NEW YORK ENTRANCE SIGN — 67

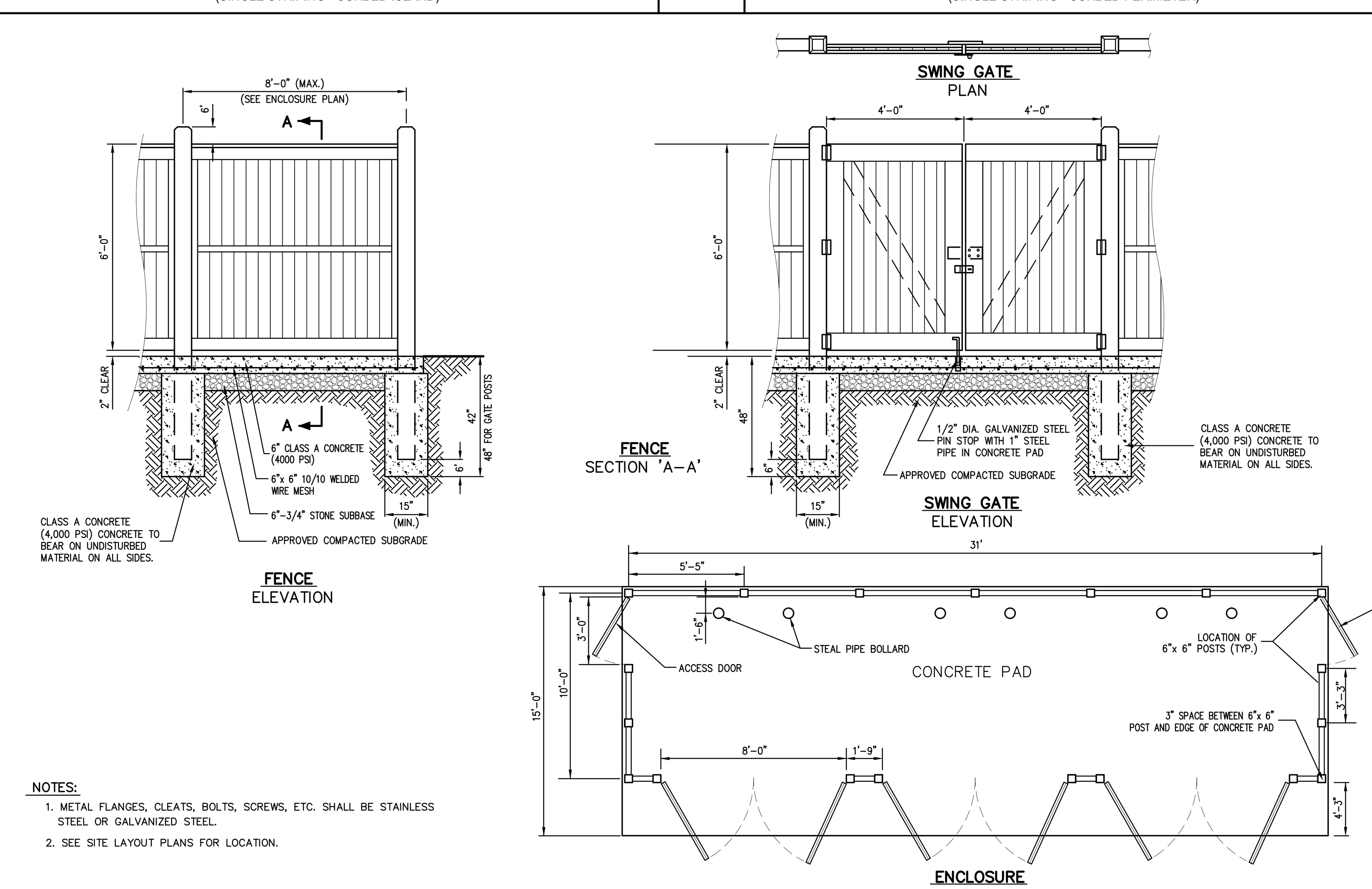

NOTES:

1. METAL FLANGES, CLEATS, BOLTS, SCREWS, ETC. SHALL BE STAINLESS STEEL OR GALVANIZED STEEL.
2. SEE SITE LAYOUT PLANS FOR LOCATION.

TRASH ENCLOSURE WITH CONCRETE PAD — 68
(PVC)

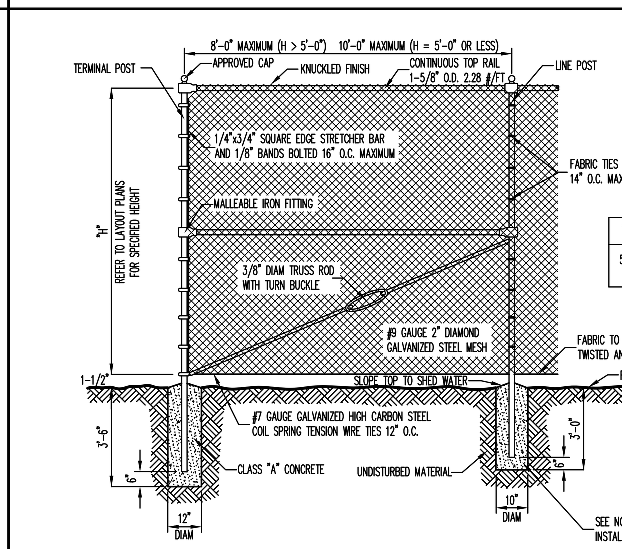

"H" (FT)	LINE POST	TERMINAL POST
5' OR LESS	2" O.D./2.72 #/FT	2.5" O.D./3.65 #/FT
> 5'-0"	2.5" O.D./3.65 #/FT	3" O.D./5.79 #/FT

NOTES:

1. ALL POSTS, RAILS, FABRIC AND ACCESSORIES SHALL BE GALVANIZED.
2. POST AND RAILS SHALL BE STANDARD FULL WEIGHT GALVANIZED SCHEDULE 40 PIPE MANUFACTURED AND GALVANIZED IN ACCORDANCE WITH ASTM A120. ALL MATERIALS SHALL BE NEW AND FIRST CLASS AND SHALL NOT INCLUDE RECONDITIONED OR REROLLED PIPE.
3. FITTINGS SHALL BE MALLEABLE IRON FITTINGS CONFORMING TO THE REQUIREMENTS OF ASTM A47 GALVANIZED IN ACCORDANCE WITH ASTM A153.
4. FABRIC SHALL BE 9 GAUGE GALVANIZED 2" MESH. TOP SELVAGE SHALL HAVE KNUCKLED FINISH.
5. TENSION WIRE SHALL BE 7 GAUGE MEETING THE REQUIREMENTS OF ASTM A641 AS MODIFIED HEREIN. THE TENSILE STRENGTH SHALL BE AT LEAST 80,000 PSI WITH A GALVANIZED COATING OF NOT LESS THAN 0.7 OZ. PER SQUARE FOOT.
6. FABRIC TIES SHALL BE MINIMUM 9 GAUGE GALVANIZED STEEL OR ALUMINUM. MINIMUM SPACING SHALL BE AS FOLLOWS:
   A. 14" O.C. AT LINE POSTS
   B. 24" O.C. AT TOP RAIL
   C. 12" O.C. AT TENSION WIRE
7. WHERE CHAIN LINK FENCE IS TO BE INSTALLED ON WALLS, THE FENCE POSTS SHALL BE IMBEDDED A MINIMUM OF TWELVE (12) INCHES IN THE WALL. NEWLY CONSTRUCTED WALLS SHALL BE PROVIDED WITH PROPER SIZE SLEEVES TO ACCOMMODATE FENCE POSTS. FENCE POSTS SHALL BE SECURELY GROUTED IN PLACE USING AN APPROVED HIGH STRENGTH, NON–SHRINKING, NON–STAINING GROUT.
8. THE CONTRACTOR WILL BE REQUIRED TO SUBMIT SHOP AND ERECTION DRAWINGS INDICATING MATERIALS, SIZES AND DIMENSIONS OF FENCING TO THE OWNER'S FIELD REPRESENTATIVE PRIOR TO ORDERING MATERIALS FOR HIS REVIEW AND APPROVAL.
9. PRIOR TO INSTALLATION OF THE FENCE, THE CONTRACTOR SHALL CHECK THE FENCE LAYOUT WITH THE OWNER'S FIELD REPRESENTATIVE WHO MUST APPROVE THE LAYOUT BEFORE ANY OF THE WORK IS TO BE DONE.

CHAIN LINK FENCE — 69
(GALVANIZED)

NO.	REVISION	DATE	BY
1.	SITE PLAN SUBMISSION	05/19/2014	CS
2.	REVISED PER CITY COMMENTS	10/20/2014	CS
3.	REVISED PER CITY COMMENTS	12/10/2014	CS
4.	REVISED PER CITY COMMENTS	03/17/2015	CS
5.	REVISED PER CITY COMMENTS	05/01/2015	CS
6.	REVISED PER CITY COMMENTS	05/15/2015	CS
7.	SITE PLAN SUBMISSION	10/31/2016	CS

Previous Editions Obsolete

APPLICANT/OWNER:
FRENCH–AMERICAN SCHOOL OF NEW YORK
525 FENIMORE ROAD
MAMARONECK, NY 10543

ARCHITECT:
STANTEC
400 MORGAN CENTER
101 EAST DIAMOND STREET
BUTLER, PA 16001–5923

JMC Planning, Engineering, Landscape Architecture & Land Surveying, PLLC
JMC Site Development Consultants, LLC
John Meyer Consulting, Inc.
120 BEDFORD ROAD • ARMONK, NY 10504
voice 914.273.5225 • fax 914.273.2102
www.jmcpllc.com

JMC

CONSTRUCTION DETAILS

FRENCH–AMERICAN SCHOOL OF NEW YORK
336 RIDGEWAY
CITY OF WHITE PLAINS, NEW YORK

DRAWN: CS — APPROVED: RR
SCALE: N.T.S.
DATE: 09/29/2014
PROJECT No: 10170
DWG: 10170-DETAILS — TAB: DET-05 SP — LS: --
DRAWING No: SP–16

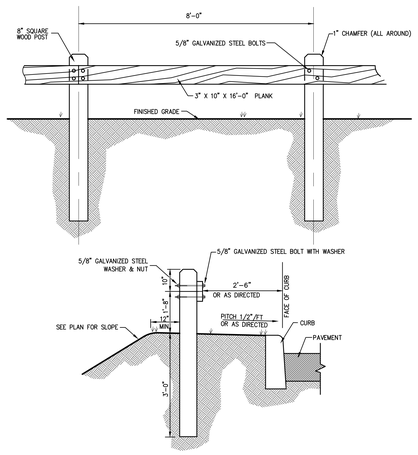

NOTES:

1. ALL WOOD TO BE PRESSURE TREATED LUMBER.
2. GALVANIZED BOLT AND NUT TO BE 4000# MIN., 5400# MAX. TENSILE STRENGTH. AFTER GALVANIZING BOLT AND NUT, THE NUT SHALL BE FREE RUNNING ON THE BOLT.

WOOD GUIDE RAIL 70

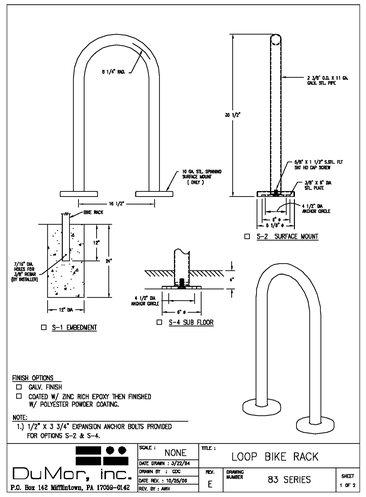

FINISH OPTIONS

- ☐ GALV. FINISH
- ☐ COATED W/ ZINC RICH EPOXY THEN FINISHED W/ POLYESTER POWDER COATING.

NOTE:

1.) 1/2" X 3 3/4" EXPANSION ANCHOR BOLTS PROVIDED FOR OPTIONS S-2 & S-4.

DuMor, inc.	SCALE: NONE	TITLE: LOOP BIKE RACK
P.O. Box 142 Mifflintown, PA 17059-0142	DATE DRAWN: 3/22/94 · DRAWN BY: GDC · DATE REV.: 10/25/06 · REV. BY: ABH	REV. E · DRAWING NUMBER 83 SERIES · SHEET 1 OF 3

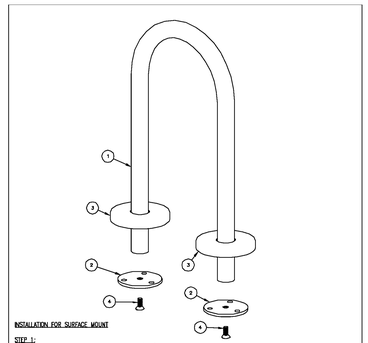

INSTALLATION FOR SURFACE MOUNT

STEP 1:
USE 1 - PC. BIKE LOOP, SURFACE MOUNT (1)
2 - PCS. 3/8" THK SURFACE MOUNT PLATE (2)
2 - PCS. 10 GA X 8" DIA ANCHOR PLATE COVER (3)
2 - PCS. 5/8" X 1 1/2" SS FLT SKT HD CAP SCREW (4)
SLIDE 10 GA X 8" DIA ANCHOR COVER (3) OVER BIKE LOOP, SURFACE MOUNT (1) LEGS. ATTACH 3/8" THK. SURFACE MOUNT PLATE (2) TO BIKE LOOP, SURFACE MOUNT (1) USING HARDWARE (4).

STEP 2:
ANCHOR ACCORDINGLY.

INSTALLATION FOR SUB FLOOR
SAME AS SURFACE MOUNT BUT DO NOT USE 10 GA X 8" DIA ANCHOR PLATE COVER.

ITEM	QTY	PART NO	DESCRIPTION
1	1	S-BB-BB-BB-BLPB-1	BIKE LOOP, SURF MOUNT
2	2	S-SB-BB-SS	3/8" THK SURFACE MOUNT PLATE
3	2	S-BB-BB-PA	10 GA X 8" DIA SS. ANCHOR PLATE COVER
4	2	1-13-100	5/8" X 1 1/2" SS FLT SKT HD CAP SCR

DuMor, inc.	SCALE: NONE	TITLE: LOOP BIKE RACK ASSEMBLY
P.O. Box 142 Mifflintown, PA 17059-0142	DATE DRAWN: 3/22/94 · DRAWN BY: GDC · DATE REV.: 10/25/06 · REV. BY: ABH	REV. E · DRAWING NUMBER 83 SERIES · SHEET 2 OF 3

NOTES:

1. ALL CONCRETE SHALL BE CLASS A CONCRETE (4,000 PSI).
2. COLOR OF BICYCLE RACK SHALL BE BLACK.
3. BIKE RACKS SHALL BE SURFACE MOUNTED.

BICYCLE RACK 71

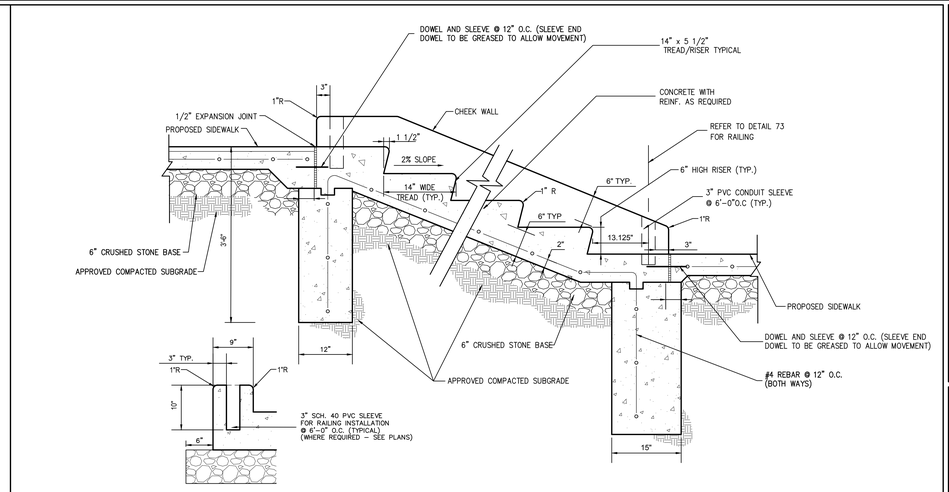

CONCRETE CHEEK WALL SECTION

NOTES:

1. CONCRETE FOOTINGS SHALL EXTEND TO 3'-6" BELOW GRADE UNLESS UNFRACTURED BEDROCK IS ENCOUNTERED. IN THE EVENT THAT BEDROCK IS ENCOUNTERED A 12" DEEP KEYWAY SHALL BE CUT INTO THE ROCK, FOR THE ENTIRE LENGTH AND WIDTH OF THE FOOTING.
2. RAILING SHALL BE INSTALLED ON BOTH SIDES OF STEPS.

CONCRETE STEPS WITH CHEEK WALL 72

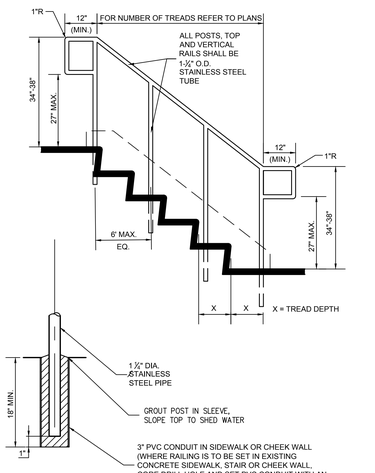

NOTES

1. POSTS SHALL BE SECURELY GROUTED IN PLACE USING AN APPROVED HIGH STRENGTH, NON-SHRINKING, NON-STAINING GROUT.
3. RAILING SHALL BE INSTALLED ON BOTH SIDES OF STEPS.

STEEL PIPE RAILING FOR STAIRS 73

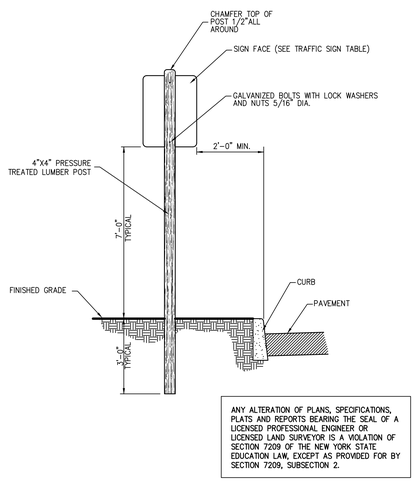

ANY ALTERATION OF PLANS, SPECIFICATIONS, PLATS AND REPORTS BEARING THE SEAL OF A LICENSED PROFESSIONAL ENGINEER OR LICENSED LAND SURVEYOR IS A VIOLATION OF SECTION 7209 OF THE NEW YORK STATE EDUCATION LAW, EXCEPT AS PROVIDED FOR BY SECTION 7209, SUBSECTION 2.

TRAFFIC SIGN POST (WOOD) 74

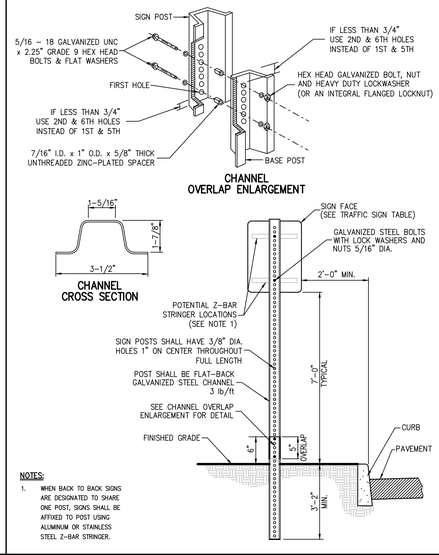

NOTES:

1. WHEN BACK TO BACK SIGNS ARE DESIGNATED TO SHARE ONE POST, SIGNS SHALL BE AFFIXED TO POST USING ALUMINUM OR STAINLESS STEEL Z-BAR STRINGER.

TRAFFIC SIGN POST (BREAKAWAY STEEL CHANNEL) 75

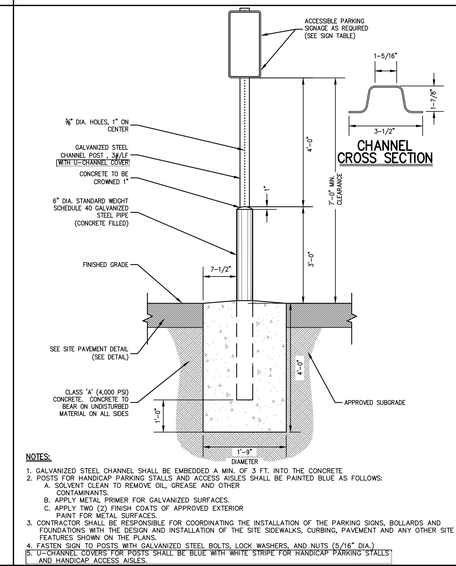

NOTES:

1. GALVANIZED STEEL CHANNEL SHALL BE EMBEDDED A MIN. OF 3 FT. INTO THE CONCRETE
2. POSTS FOR HANDICAP PARKING STALLS AND ACCESS AISLES SHALL BE PAINTED BLUE AS FOLLOWS:
   A. SOLVENT CLEAN TO REMOVE OIL, GREASE AND OTHER CONTAMINANTS.
   B. APPLY METAL PRIMER FOR GALVANIZED SURFACES.
   C. APPLY TWO (2) FINISH COATS OF APPROVED EXTERIOR PAINT FOR METAL SURFACES.
3. CONTRACTOR SHALL BE RESPONSIBLE FOR COORDINATING THE INSTALLATION OF THE PARKING SIGNS, BOLLARDS AND FOUNDATIONS WITH THE DESIGN AND INSTALLATION OF THE SITE SIDEWALKS, CURBING, PAVEMENT AND ANY OTHER SITE FEATURES SHOWN ON THE PLANS.
4. FASTEN SIGN TO POSTS WITH GALVANIZED STEEL BOLTS, LOCK WASHERS, AND NUTS (5/16" DIA.)
5. U-CHANNEL COVERS FOR POSTS SHALL BE BLUE WITH WHITE STRIPE FOR HANDICAP PARKING STALLS AND HANDICAP ACCESS AISLES.

ACCESSIBLE PARKING SIGN DETAIL 76

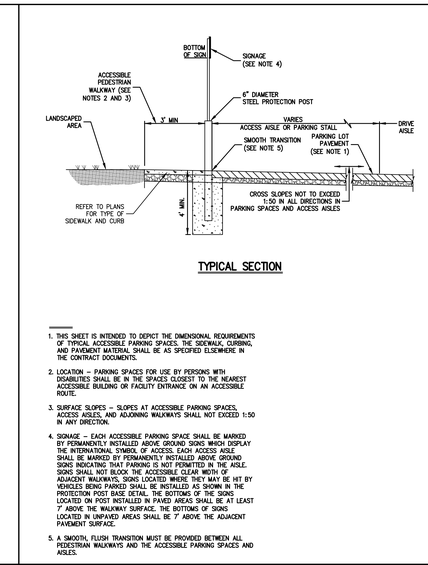

TYPICAL SECTION

1. THIS SHEET IS INTENDED TO DEPICT THE DIMENSIONAL REQUIREMENTS OF TYPICAL ACCESSIBLE PARKING SPACES, THE SIDEWALK, CURBING, AND PAVEMENT MATERIAL SHALL BE AS SPECIFIED ELSEWHERE IN THE CONTRACT DOCUMENTS.
2. LOCATION – PARKING SPACES FOR USE BY PERSONS WITH DISABILITIES SHALL BE IN THE SPACES CLOSEST TO THE NEAREST ACCESSIBLE BUILDING OR FACILITY ENTRANCE ON AN ACCESSIBLE ROUTE.
3. SURFACE SLOPES – SLOPES AT ACCESSIBLE PARKING SPACES, ACCESS AISLES, AND ADJOINING WALKWAYS SHALL NOT EXCEED 1:50 IN ANY DIRECTION.
4. SIGNAGE – EACH ACCESSIBLE PARKING SPACE SHALL BE MARKED BY PERMANENTLY INSTALLED ABOVE GROUND SIGNS WHICH DISPLAY THE INTERNATIONAL SYMBOL OF ACCESS. EACH ACCESS AISLE SHALL BE MARKED BY PERMANENTLY INSTALLED ABOVE GROUND SIGNS INDICATING THAT PARKING IS NOT PERMITTED IN THE AISLE. SIGNS SHALL NOT BLOCK THE ACCESSIBLE CLEAR WIDTH OF ADJACENT WALKWAYS. SIGNS LOCATED WHERE THEY MAY BE HIT BY VEHICLES BEING PARKED SHALL BE INSTALLED AS SHOWN IN THE PROTECTION POST BASE DETAIL. THE BOTTOMS OF THE SIGNS LOCATED ON POST INSTALLED IN PAVED AREAS SHALL BE AT LEAST 7' ABOVE THE WALKWAY SURFACE. THE BOTTOMS OF SIGNS LOCATED IN UNPAVED AREAS SHALL BE 7' ABOVE THE ADJACENT PAVEMENT SURFACE.
5. A SMOOTH, FLUSH TRANSITION MUST BE PROVIDED BETWEEN ALL PEDESTRIAN WALKWAYS AND THE ACCESSIBLE PARKING SPACES AND AISLES.

TYPICAL ACCESSIBLE PARKING STALL AND AISLE (TYPE C) 77

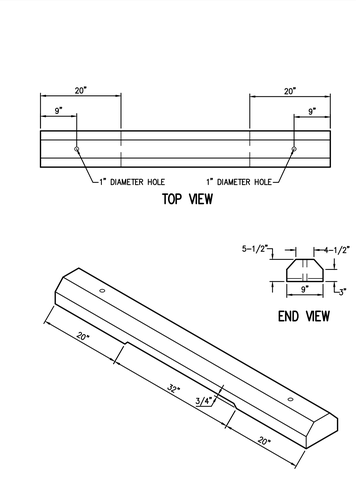

NOTES

1. CONCRETE MINIMUM STRENGTH–4,000 PSI AT 28 DAYS
2. REINFORCEMENT–#4 REBAR

CONCRETE BUMPER BLOCK 78

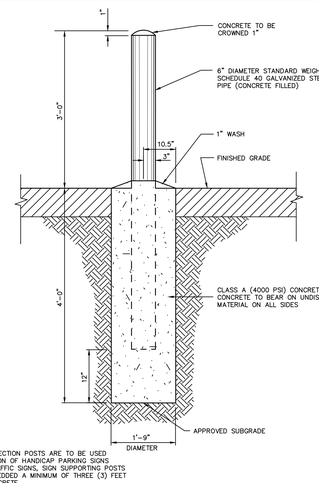

NOTES:

1. WHEN PROTECTION POSTS ARE TO BE USED FOR PROTECTION OF HANDICAP PARKING SIGNS OR OTHER TRAFFIC SIGNS, SIGN SUPPORTING POSTS SHALL BE IMBEDDED A MINIMUM OF THREE (3) FEET INTO THE CONCRETE.
2. POST SHALL BE PAINTED YELLOW AS FOLLOWS:
   A. SOLVENT CLEAN TO REMOVE OIL, GREASE AND OTHER CONTAMINANTS.
   B. APPLY METAL PRIMER FOR GALVANIZED SURFACES.
   C. APPLY TWO (2) FINISH COATS OF APPROVED EXTERIOR PAINT FOR METAL SURFACES.

STEEL PIPE PROTECTION POST 79

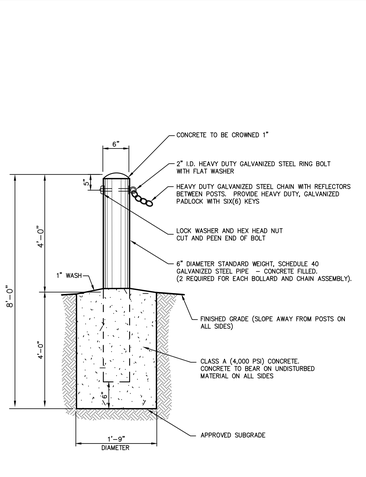

BOLLARD & CHAIN ASSEMBLY (STEEL PIPE) 80

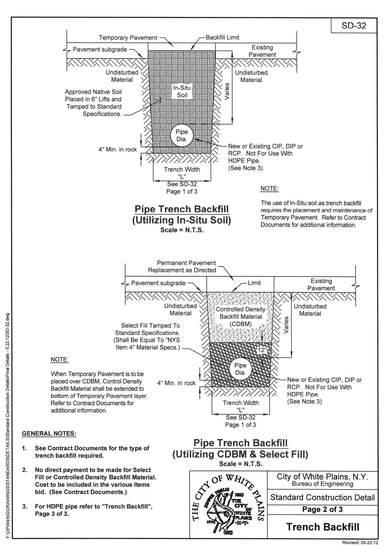

TRENCH DETAIL WITHIN CITY RIGHT-OF-WAY 81

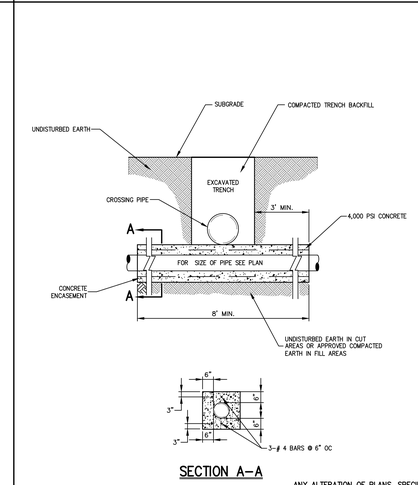

SECTION A–A

NOTE:

1. FULL LENGTH OF PIPE TO BE USED AT CROSSING. PIPE TO BE CENTERED ON CENTERLINE OF CROSSING PIPE. NO JOINTS SHALL BE LOCATED WITHIN THE AREA OF CONCRETE ENCASEMENT.

ANY ALTERATION OF PLANS, SPECIFICATIONS, PLATS AND REPORTS BEARING THE SEAL OF A LICENSED PROFESSIONAL ENGINEER OR LICENSED LAND SURVEYOR IS A VIOLATION OF SECTION 7209 OF THE NEW YORK STATE EDUCATION LAW, EXCEPT AS PROVIDED FOR BY SECTION 7209, SUBSECTION 2.

CONCRETE ENCASEMENT 82

NO.	REVISION	DATE	BY
1.	SITE PLAN SUBMISSION	05/19/2014	CS
2.	REVISED PER CITY COMMENTS	10/20/2014	CS
3.	REVISED PER CITY COMMENTS	12/10/2014	CS
4.	REVISED PER CITY COMMENTS	03/17/2015	CS
5.	REVISED PER CITY COMMENTS	05/01/2015	CS
6.	REVISED PER CITY COMMENTS	05/15/2015	CS
7.	SITE PLAN SUBMISSION	10/31/2016	CS

Previous Editions Obsolete

FRENCH–AMERICAN SCHOOL OF NEW YORK
525 FERNHILL ROAD
MAMARONECK, NY 10543

ARCHITECT
STANTEC
400 MORGAN CENTER
101 EAST DIAMOND STREET
BUTLER, PA 16001-5923

JMC Planning, Engineering, Landscape Architecture & Land Surveying, PLLC
JMC Site Development Consultants, LLC
John Meyer Consulting, Inc.
120 BEDFORD ROAD • ARMONK, NY 10504
voice 914.273.5225 • fax 914.273.2102
www.jmcpllc.com

CONSTRUCTION DETAILS
FRENCH–AMERICAN SCHOOL OF NEW YORK
336 RIDGEWAY
CITY OF WHITE PLAINS, NEW YORK

DRAWN: CS	APPROVED: RR
SCALE: N.T.S.	
DATE: 09/29/2014	
PROJECT No.: 10170	
JMC: 10170-DETAILS	FILE: DET-06 SP
DRAWING No.: SP–17	LD: --

COPYRIGHT © by JMC. All rights reserved. No part of this document may be reproduced, stored in a retrieval system, or transmitted, in any form or by any means, electronic, mechanical, photocopying, recording, or otherwise, without the prior written permission of JMC. Any use of this document or portions thereof without the written permission of JMC shall be without liability to JMC, and client shall indemnify and hold harmless JMC from all claims, damages, losses and expenses including attorney's fees arising out of or resulting therefrom.
NOT FOR CONSTRUCTION

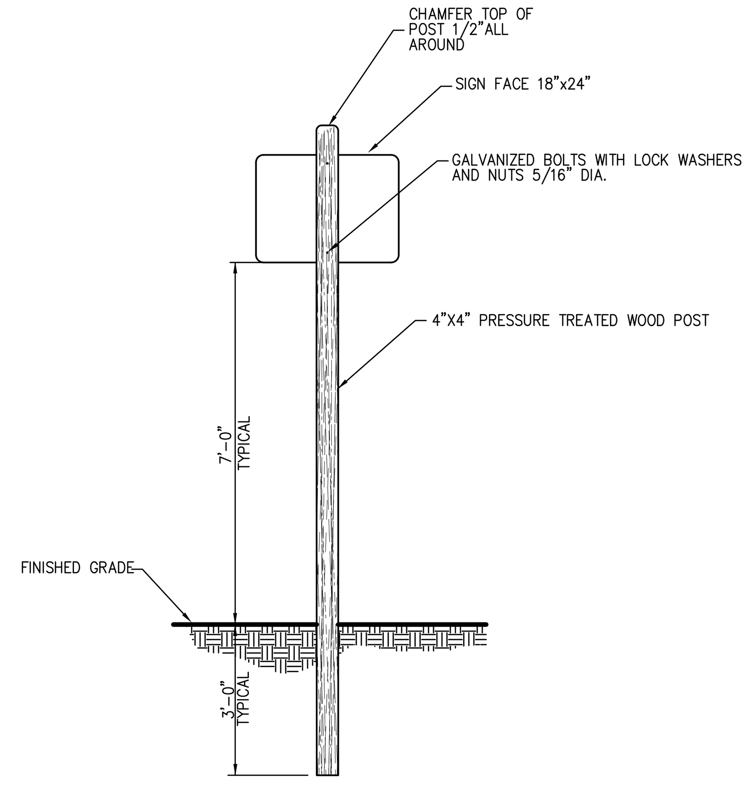

NOTES:

1. THE SIGN MUST BE ERECTED IN THE IMMEDIATE VICINITY OF THE STORMWATER PRACTICE, BEARING THE FOLLOWING INFORMATION:

   STORMWATER MANAGEMENT PRACTICE–(NAME OF THE PRACTICE)
   PROJECT IDENTIFICATION–(SPDES CONSTRUCTION PERMIT #)
   MUST BE MAINTAINED IN ACCORDANCE WITH O&M PLAN
   DO NOT REMOVE OR ALTER

2. A SHOP DRAWING OF THE PROPOSED SIGN WITH ALL PERTINENT INFORMATION SHALL BE PROVIDED TO JOHN MEYER CONSULTING PRIOR TO FABRICATION AND INSTALLATION.

STORMWATER MANAGEMENT PRACTICE IDENTIFICATION SIGN
(WOOD)

83

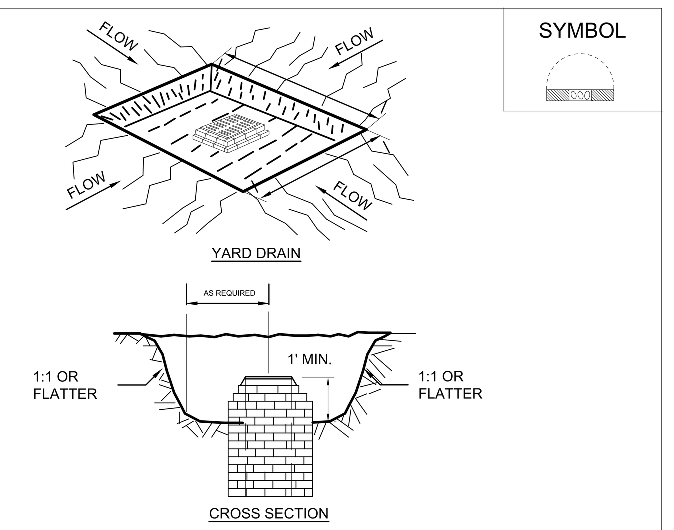

CONSTRUCTION SPECIFICATIONS

1. SEDIMENT SHALL BE REMOVED AND THE TRAP RESTORED TO ITS ORIGINAL DIMENSIONS WHEN THE SEDIMENT HAS ACCUMULATED TO 1/2 THE DESIGN DEPTH OF THE TRAP. REMOVED SEDIMENT SHALL BE DEPOSITED IN A SUITABLE AREA AND IN SUCH A MANNER THAT IT WILL NOT ERODE.
2. THE VOLUME OF SEDIMENT STORAGE SHALL BE 1800 CUBIC FEET PER ACRE OF CONTRIBUTORY DRAINAGE.
3. THE STRUCTURE SHALL BE INSPECTED AFTER EACH RAIN AND REPAIRS MADE AS NEEDED.
4. CONSTRUCTION OPERATIONS SHALL BE CARRIED OUT IN SUCH A MANNER THAT EROSION AND WATER POLLUTION SHALL BE MINIMIZED.
5. THE SEDIMENT TRAP SHALL BE REMOVED AND THE AREA STABILIZED WHEN THE CONSTRUCTED DRAINAGE AREA HAS BEEN PROPERLY STABILIZED.
6. ALL CUT SLOPES SHALL BE 1:1 OR FLATTER.

MAXIMUM DRAINAGE AREA: 3 ACRES

U.S. DEPARTMENT OF AGRICULTURE
NATURAL RESOURCES CONSERVATION SERVICE
NEW YORK STATE DEPARTMENT OF ENVIRONMENTAL CONSERVATION
NEW YORK STATE SOIL & WATER CONSERVATION COMMITTEE

CATCH BASIN SEDIMENT TRAP ST-III

CATCH BASIN SEDIMENT TRAP

84

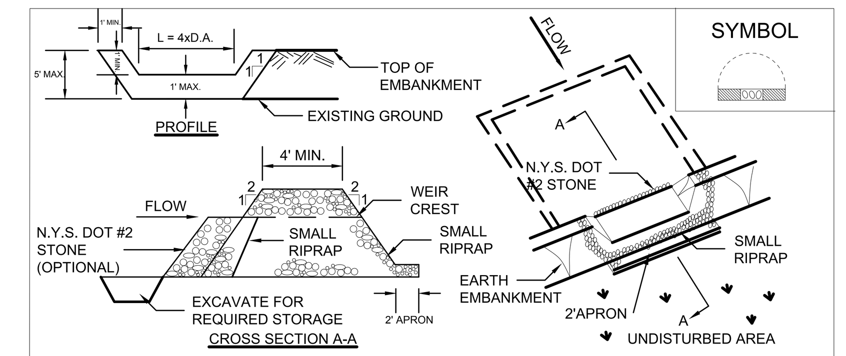

OPTION: A ONE FOOT LAYER OF N.Y.S. DOT #2 STONE MAY BE PLACED ON THE UPSTREAM SIDE OF THE RIPRAP INPLACE OF THE EMBEDDED FILTER CLOTH.

CONSTRUCTION SPECIFICATIONS

1. AREA UNDER EMBANKMENT SHALL BE CLEARED, GRUBBED AND STRIPPED OF ANY VEGETATION AND ROOT MAT. THE POOL AREA SHALL BE CLEARED.
2. THE FILL MATERIAL FOR THE EMBANKMENT SHALL BE FREE OF ROOTS AND OTHER WOODY VEGETATION AS WELL AS OVER-SIZED STONES, ROCKS, ORGANIC MATERIAL OR OTHER OBJECTIONABLE MATERIAL. THE EMBANKMENT SHALL BE COMPACTED BY TRAVERSING WITH EQUIPMENT WHILE IT IS BEING CONSTRUCTED.
3. ALL CUT AND FILL SLOPES SHALL BE 2:1 OR FLATTER.
4. THE STONE USED IN THE OUTLET SHALL BE SMALL RIPRAP 4"-8" ALONG WITH A 1' THICKNESS OF 2" AGGREGATE PLACED ON THE UP-GRADE SIDE ON THE SMALL RIPRAP OR EMBEDDED FILTER CLOTH IN THE RIPRAP.
5. SEDIMENT SHALL BE REMOVED AND TRAP RESTORED TO ITS ORIGINAL DIMENSIONS WHEN THE SEDIMENT HAS ACCUMULATED TO 1/2 THE DESIGN DEPTH OF THE TRAP.
6. THE STRUCTURE SHALL BE INSPECTED AFTER EACH RAIN AND REPAIRS MADE AS NEEDED.
7. CONSTRUCTION OPERATIONS SHALL BE CARRIED OUT IN SUCH A MANNER THAT EROSION AND WATER POLLUTION IS MINIMIZED.
8. THE STRUCTURE SHALL BE REMOVED AND THE AREA STABILIZED WHEN THE DRAINAGE AREA HAS BEEN PROPERLY STABILIZED.

MAXIMUM DRAINAGE AREA 5 ACRES

U.S. DEPARTMENT OF AGRICULTURE
NATURAL RESOURCES CONSERVATION SERVICE
NEW YORK STATE DEPARTMENT OF ENVIRONMENTAL CONSERVATION
NEW YORK STATE SOIL & WATER CONSERVATION COMMITTEE

STONE OUTLET SEDIMENT TRAP ST-IV

STONE OUTLET SEDIMENT TRAP

85

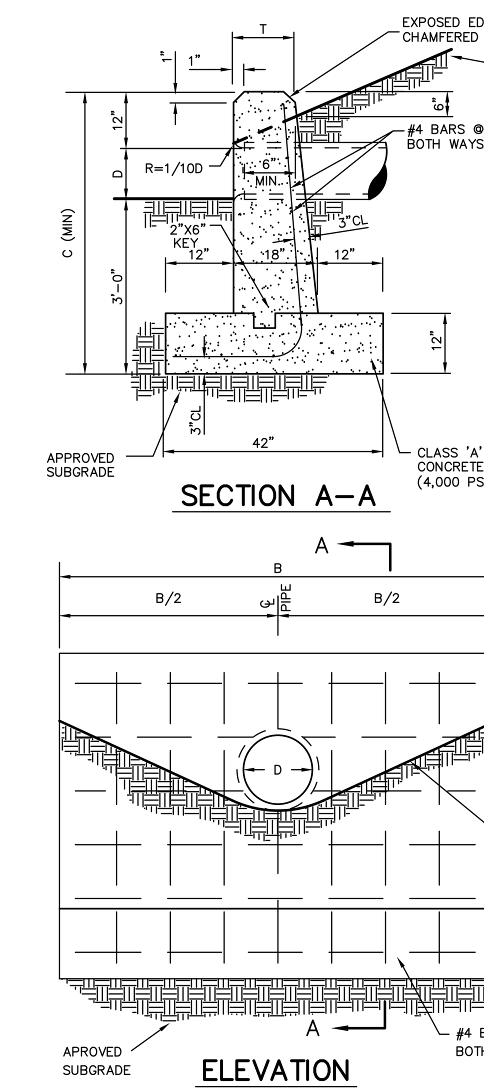

			1.5:1 SLOPE	2:1 SLOPE	3:1 SLOPE
D	C MIN.	T	B	B	B
12"	5'–0"	8"	5'–0"	6'–0"	7'–0"
15"	5'–3"	8"	5'–6"	7'–0"	8'–9"
18"	5'–6"	8"	6'–0"	8'–0"	10'–6"
21"	5'–9"	10"	7'–0"	9'–0"	12'–3"
24"	6'–0"	10"	8'–0"	10'–0"	14'–0"
27"	6'–3"	12"	8'–6"	11'–0"	15'–9"
30"	6'–6"	12"	9'–0"	12'–0"	17'–6"
36"	7'–0"	12"	10'–6"	13'–6"	19'–6"
42"	7'–6"	12"	12'–0"	15'–0"	22'–6"
48"	8'–0"	12"	13'–6"	16'–6"	25'–6"
54"	8'–6"	12"	15'–0"	18'–0"	28'–6"

NOTE A
GROUND SLOPE TO BE 3 HORIZONTAL TO 1 VERTICAL UNLESS OTHERWISE SPECIFIED (SEE CHART)

STRAIGHT CONCRETE HEADWALL

86

IRON WORLD

IRON WORLD
9390 DAVIS AVE.
HOWARD COUNTY, MD, 20723
PHONE: (301) 776-7448
TOLL FREE: 1-866-310-2747
FAX: (301) 776-7449
www.ironworldfencing.com

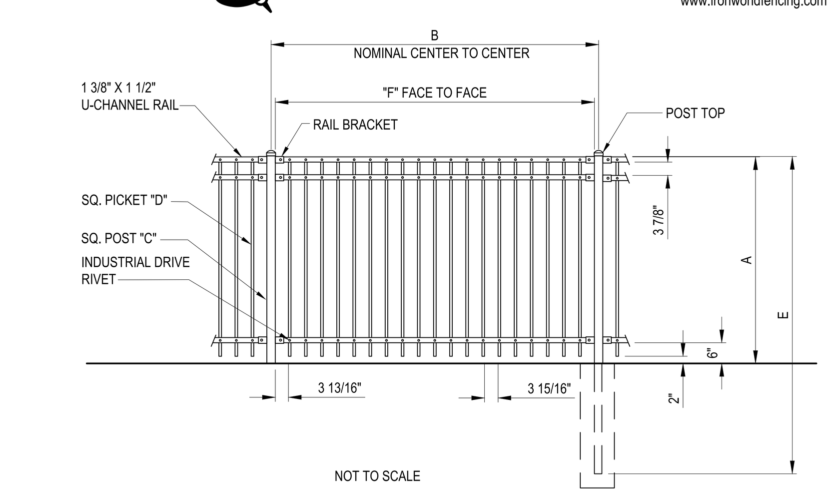

NOM HEIGHT (A)	POST OPTION (C)	PICKET OPTION (D)	
6' - 0"	4" SQ X 11 GA	3/4" SQ OR 1" SQ — 14 GA, 16 GA, 18 GA	A ____" NOM HEIGHT B ____" NOM SECTION LENGTH C ____" POST SIZE ____ GAUGE D ____" PICKET SIZE ____ GAUGE E ____" POST LENGTH F ____" FACE TO FACE OF POSTS W/ STD. FLAT MOUNT BRACKET

NOTES:
1. INSTALLATION TO BE COMPLETED IN ACCORDANCE WITH MANUFACTURERS SPECIFICATIONS.
2. DO NOT SCALE DRAWINGS.
3. SPECIFICATIONS SHOWN CAN BE CHANGED ONLY BY THE MANUFACTURER..
4. FOOTING WIDTH TO BE (4) X POST WIDTH.
5. FENCE SECTIONS USING 3/4" PICKETS WILL TOTAL 19 PICKETS PER SECTION. FENCE SECTIONS USING 1" PICKETS WILL TOTAL 18 PICKETS PER SECTION.
6. CONTRACTORS NOTE: FOR PRODUCT AND COMPANY INFORMATION VISIT www.CADdetails.com/info REFERENCE NUMBER 2812-073.

ABERDEEN FENCE
3 RAIL

2812-073
PROTECTED BY COPYRIGHT 10/09/07
www.CADdetails.com

DECORATIVE FENCE

87

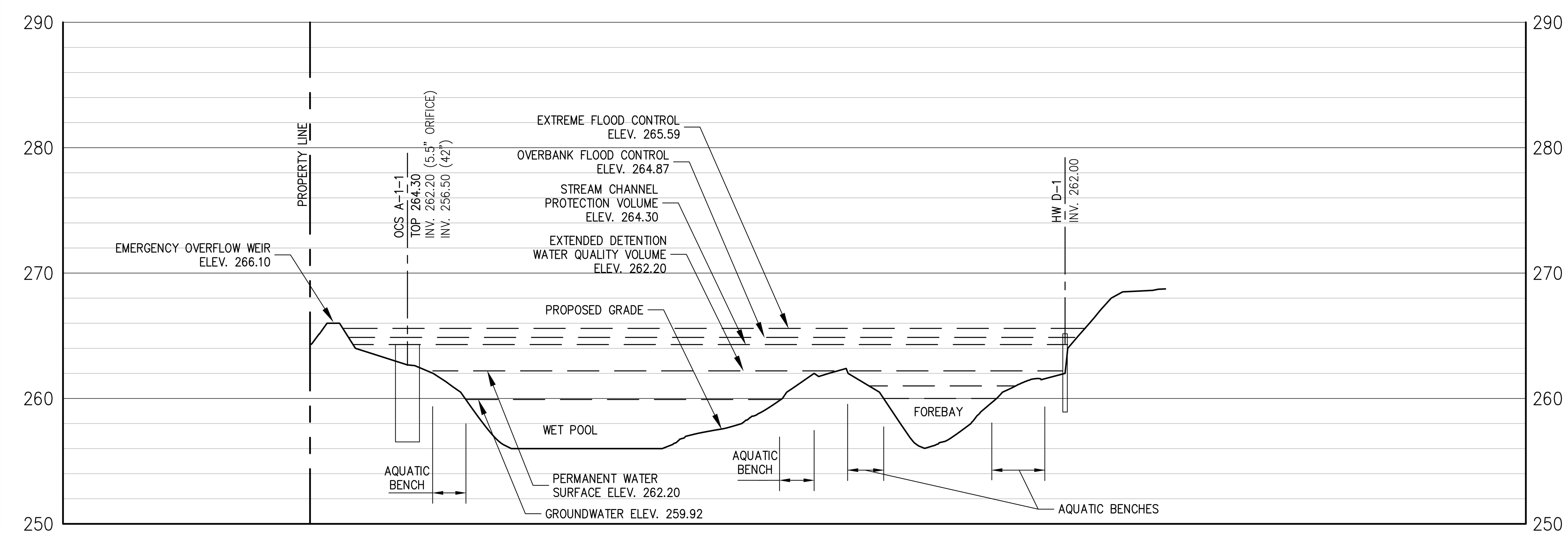

STORMWATER BASIN 1A
SCALE: HORIZ. 1" = 30' VERT. 1" = 5'

88

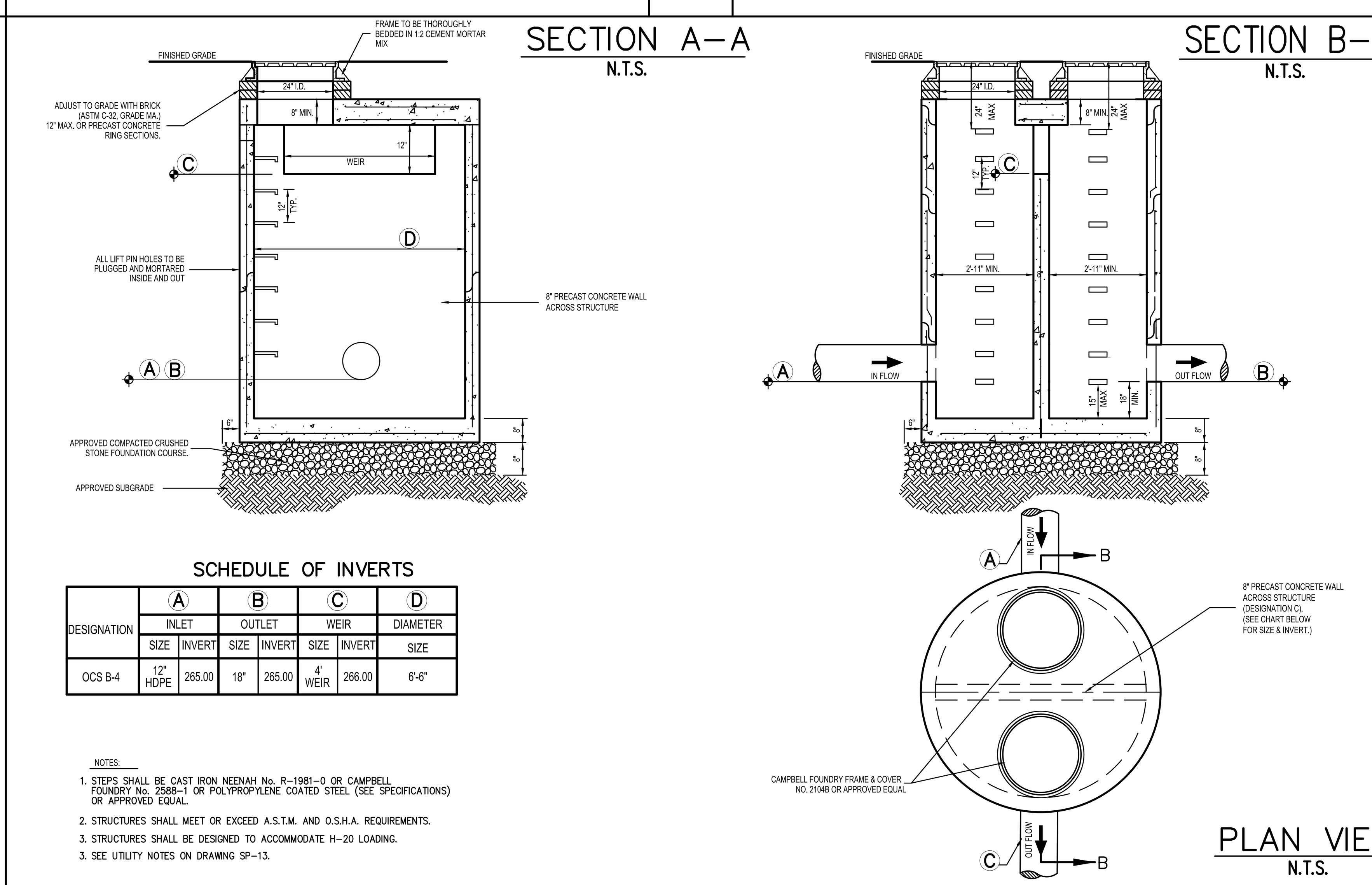

SCHEDULE OF INVERTS

DESIGNATION	(A) INLET SIZE	(A) INLET INVERT	(B) OUTLET SIZE	(B) OUTLET INVERT	(C) WEIR SIZE	(C) WEIR INVERT	(D) DIAMETER SIZE
OCS B-4	12" HDPE	265.00	18"	265.00	4' WEIR	266.00	6'-6"

NOTES:
1. STEPS SHALL BE CAST IRON NEENAH No. R–1981–0 OR CAMPBELL FOUNDRY No. 2588–1 OR POLYPROPYLENE COATED STEEL (SEE SPECIFICATIONS) OR APPROVED EQUAL.
2. STRUCTURES SHALL MEET OR EXCEED A.S.T.M. AND O.S.H.A. REQUIREMENTS.
3. STRUCTURES SHALL BE DESIGNED TO ACCOMMODATE H–20 LOADING.
3. SEE UTILITY NOTES ON DRAWING SP–13.

OUTLET CONTROL STRUCTURE

89

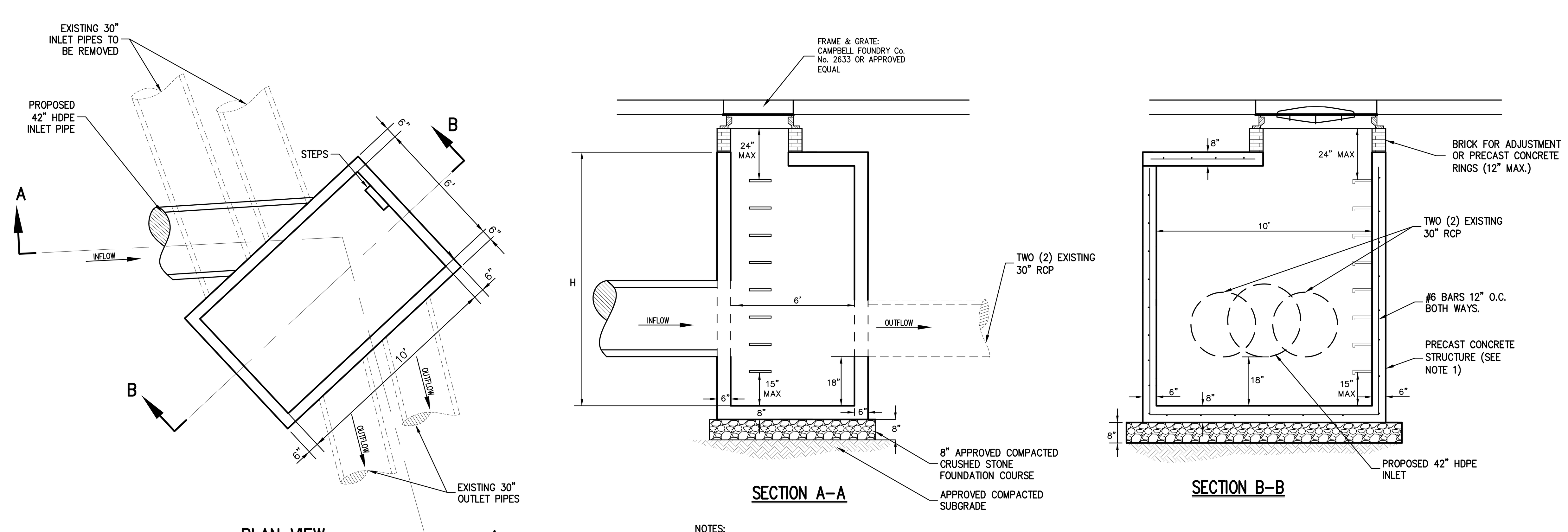

NOTES:
1. PRECAST CONCRETE STRUCTURE SHALL BE DESIGNED TO ACCOMMODATE AN H–20 DESIGN LOAD.
2. SEE UTILITY NOTES A–4 TO A–7 ON DRAWING SP–13.

INLET WITHIN RIDGEWAY

90

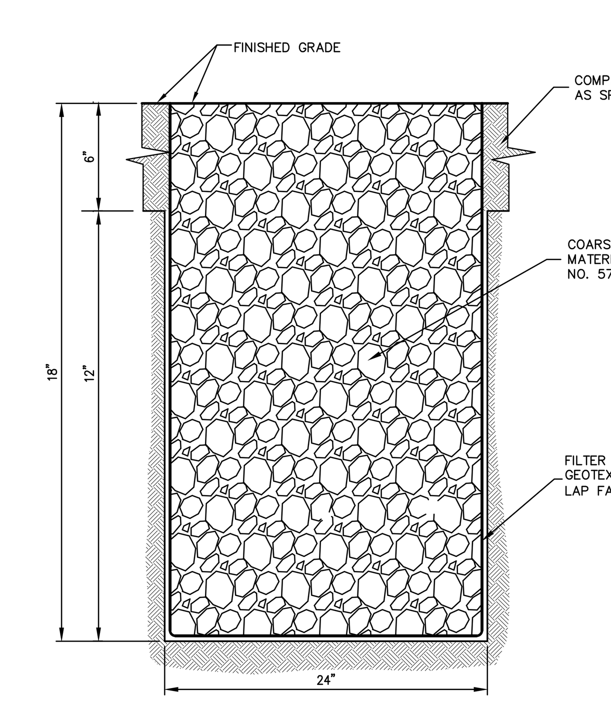

EXPOSED GRAVEL TRENCH

91

NO.	REVISION	DATE	BY
1.	SITE PLAN SUBMISSION	05/19/2014	CS
2.	REVISED PER CITY COMMENTS	10/20/2014	CS
3.	REVISED PER CITY COMMENTS	12/10/2014	CS
4.	REVISED PER CITY COMMENTS	03/17/2015	CS
5.	REVISED PER CITY COMMENTS	05/01/2015	CS
6.	REVISED PER CITY COMMENTS	05/15/2015	CS
7.	SITE PLAN SUBMISSION	10/31/2016	CS

Previous Editions Obsolete

APPLICANT/OWNER:
FRENCH–AMERICAN SCHOOL OF NEW YORK
525 FENIMORE ROAD
MAMARONECK, NY 10543

ARCHITECT:
STANTEC
400 MORGAN CENTER
101 EAST DIAMOND STREET
BUTLER, PA 16001–5923

JMC Planning, Engineering, Landscape Architecture & Land Surveying, PLLC
JMC Site Development Consultants, LLC
John Meyer Consulting, Inc.
120 BEDFORD ROAD • ARMONK, NY 10504
voice 914.273.5225 • fax 914.273.2102
www.jmcpllc.com

CONSTRUCTION DETAILS
FRENCH–AMERICAN SCHOOL OF NEW YORK
336 RIDGEWAY
CITY OF WHITE PLAINS, NEW YORK

DRAWN: CS APPROVED: RR
SCALE: N.T.S.
DATE: 09/29/2014
PROJECT No: 10170
DWG: 10170-DETAILS TAB: DET-07 SP LS: --
DRAWING No: SP–18

COPYRIGHT © 2016 by JMC. All Rights Reserved. No part of this document may be reproduced, stored in a retrieval system, or transmitted in any form or by means, electronic, mechanical, photocopying, recording or otherwise, without the prior written permission of JMC PLANNING, ENGINEERING, LANDSCAPE ARCHITECTURE & LAND SURVEYING, PLLC | JMC SITE DEVELOPMENT CONSULTANTS, LLC | JOHN MEYER CONSULTING, INC. (JMC). Any modifications or alterations to this document without the written permission of JMC shall render them invalid and unusable.

NOT FOR CONSTRUCTION

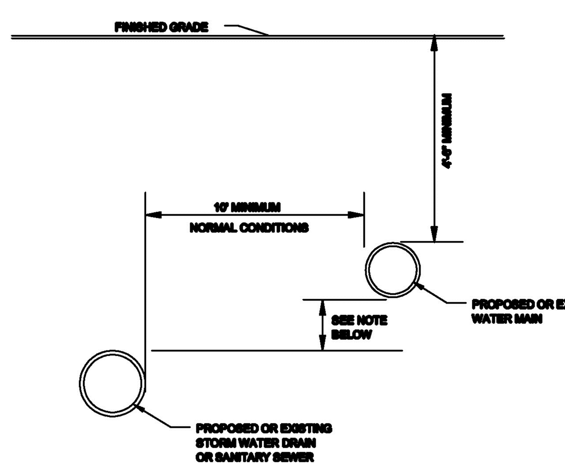

NOTE :
WHERE A 10' HORIZONTAL SEPARATION CANNOT BE OBTAINED DUE TO FIELD CONDITIONS, THE VERTICAL CLEAR DISTANCE SHALL BE A MINIMUM OF 18". HOWEVER, AN EXCEPTION TO THE 10' MINIMUM HORIZONTAL SEPARATION REQUIRES SEPARATE APPROVAL OF THE WESTCHESTER COUNTY HEALTH DEPARTMENT.

SEPARATION OF WATER MAINS AND SEWERS - PARALLEL INSTALLATION
(NTS)

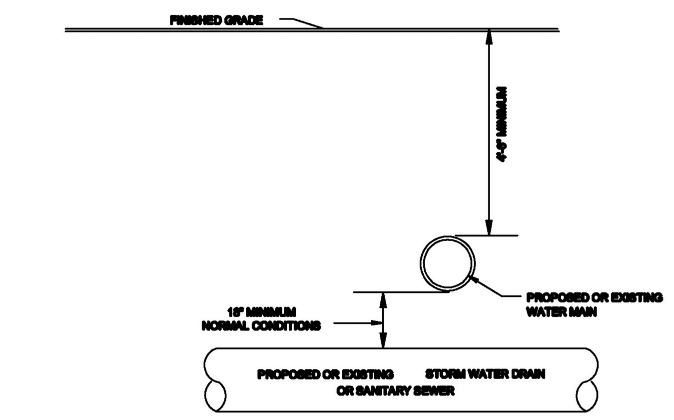

NOTE :
WATER MAINS PASSING UNDER OR OVER SEWERS SHALL HAVE A VERTICAL CLEARANCE OF 18" MINIMUM BETWEEN THE SEWER AND WATER MAIN, AND THE SEWER SHALL BE SUPPORTED AS DIRECTED BY THE ENGINEER. TO THE EXTENT FEASIBLE, JOINTS IN THE WATER MAIN SHALL BE KEPT AS FAR AS POSSIBLE FROM THE SEWER WHERE AN 18" SEPARATION CANNOT BE OBTAINED DUE TO FIELD CONDITIONS. SEPARATE APPROVAL OF THE WESTCHESTER COUNTY HEALTH DEPARTMENT SHALL BE REQUIRED.

SEPARATION OF WATER MAINS AND SEWERS - CROSSING INSTALLATION
(NTS)

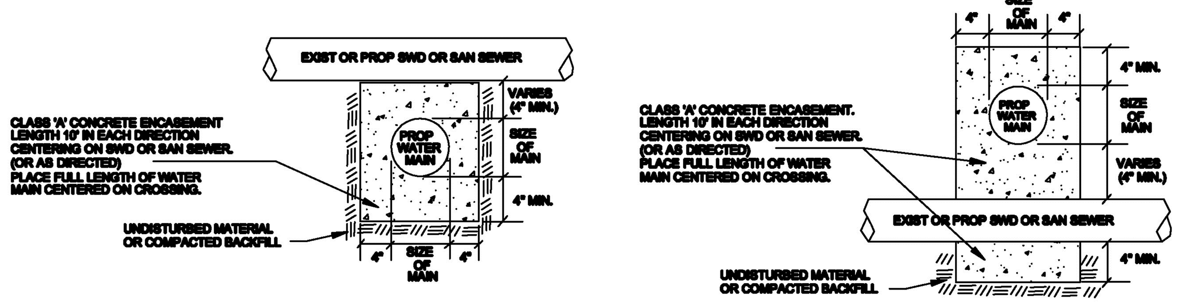

CONCRETE ENCASEMENT FOR PROPOSED WATER MAINS CROSSING UNDER AND OVER STORM WATER DRAIN OR SANITARY SEWER LINES TO BE EMPLOYED WHEN FIELD CONDITIONS PROHIBIT 10' HORIZONTAL OR 18" VERTICAL SEPARATION
(NTS)

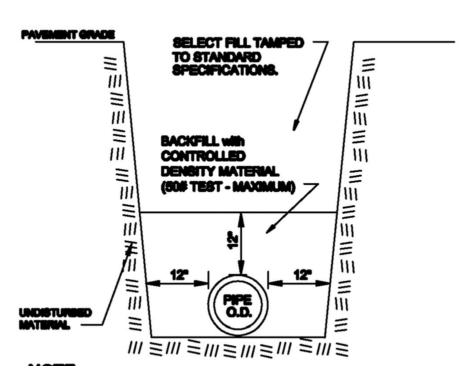

NOTE :
PIPE TO BE PLACED ON UNDISTURBED EARTH.

TRENCH DETAIL IN NORMAL SOIL CONDITIONS
(NTS)

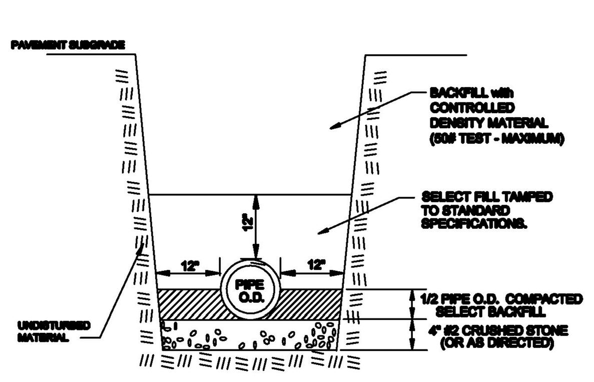

TRENCH BEDDING IN SOFT OR YIELDING SOIL CONDITIONS
(NTS)

NOTES:

1. EXISTING UTILITY CASTINGS TO BE RAISED OR LOWERED TO FINISHED GRADE AS DIRECTED. (I.E. CATCH BASIN CASTINGS, MANHOLE CASTINGS, VALVE BOXES, HYDRANTS, ETC.).
2. PROVIDE 18" VERTICAL SEPARATION BETWEEN WATER MAINS AND SANITARY SEWERS, AND 18" VERTICAL SEPARATION BETWEEN WATER MAINS AND STORM WATER DRAINS.
3. PROVIDE 10' HORIZONTAL SEPARATION BETWEEN WATER MAINS AND SANITARY SEWERS AND 10' HORIZONTAL SEPARATION BETWEEN WATER MAINS AND STORM WATER DRAINS.
4. CONNECTIONS TO EXISTING SEWER MANHOLES SHALL BE RECONSTRUCTED AS REQUIRED WITH 4' DIAMETER PRECAST RISERS WITH ROOF SLAB AND THREE (3) FOOT DIAMETER OPENING.
5. ALL TRENCHES SHALL BE BACKFILLED TO PAVEMENT SUBBASE WITH CONTROLLED DENSITY BACKFILL MATERIAL AS DIRECTED.
6. SANITARY SEWER PIPE SHALL BE MINIMUM 8" DIAMETER, SPECIAL CLASS 56, DOUBLE CEMENT LINED, DUCTILE IRON PIPE.
7. SANITARY SEWER FITTINGS SHALL BE MINIMUM 8" DIAMETER, SPECIAL CLASS 56, DOUBLE CEMENT LINED, DUCTILE IRON MECHANICAL JOINT COMPACT FITTINGS.

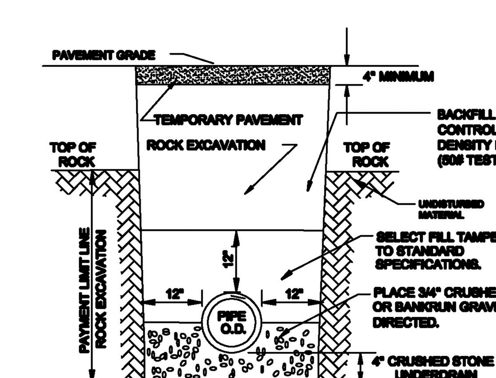

NOTE :
TEMPORARY PAVEMENT SHALL BE PLANT MIX BINDER, NYS DOT 403.13, 4" MINIMUM THICKNESS (OR AS DIRECTED).

TRENCH DETAIL FOR ROCK EXCAVATION AND TEMPORARY PAVEMENT
(NTS)

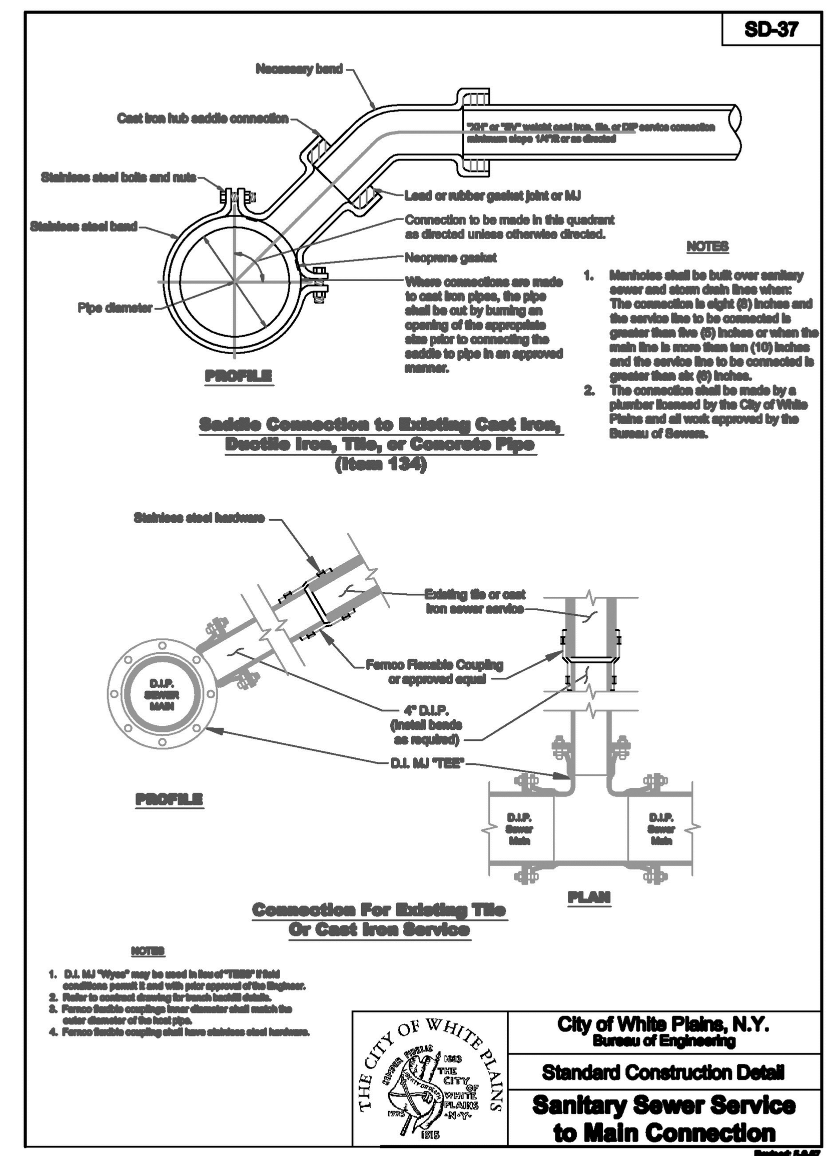

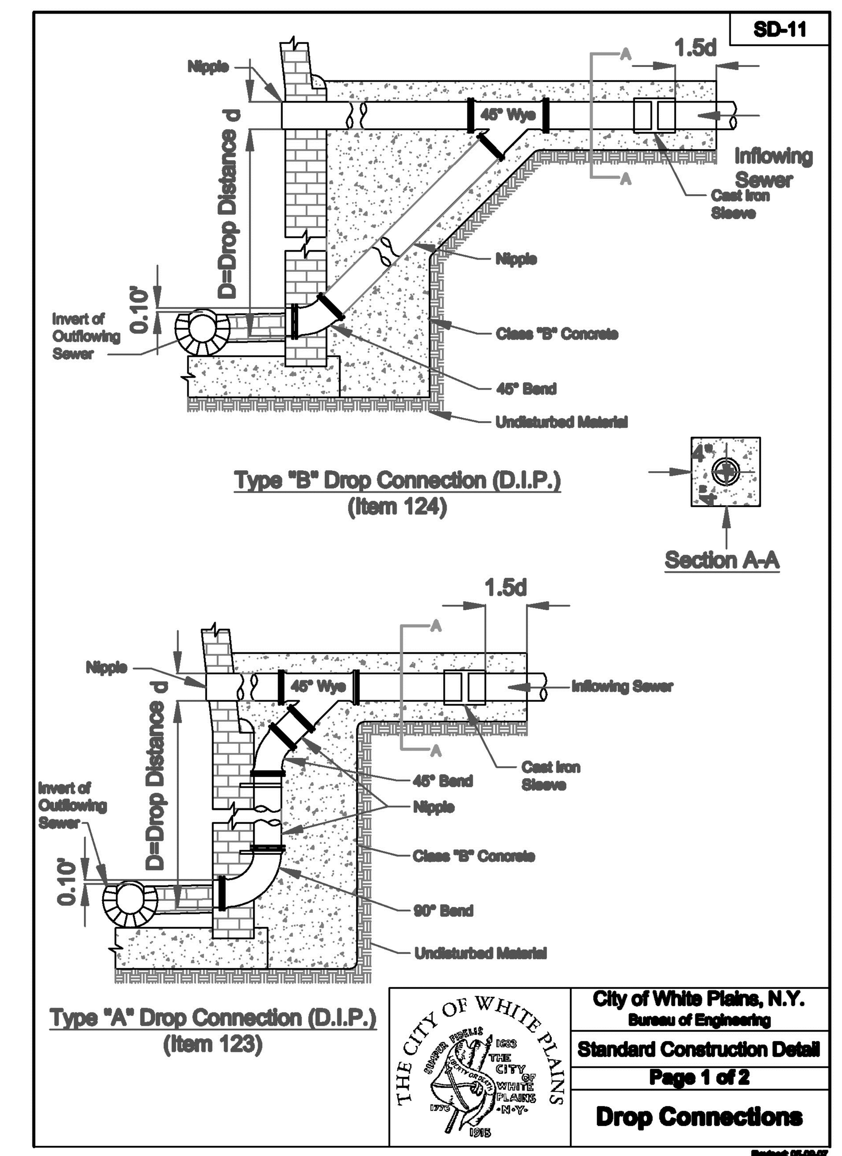

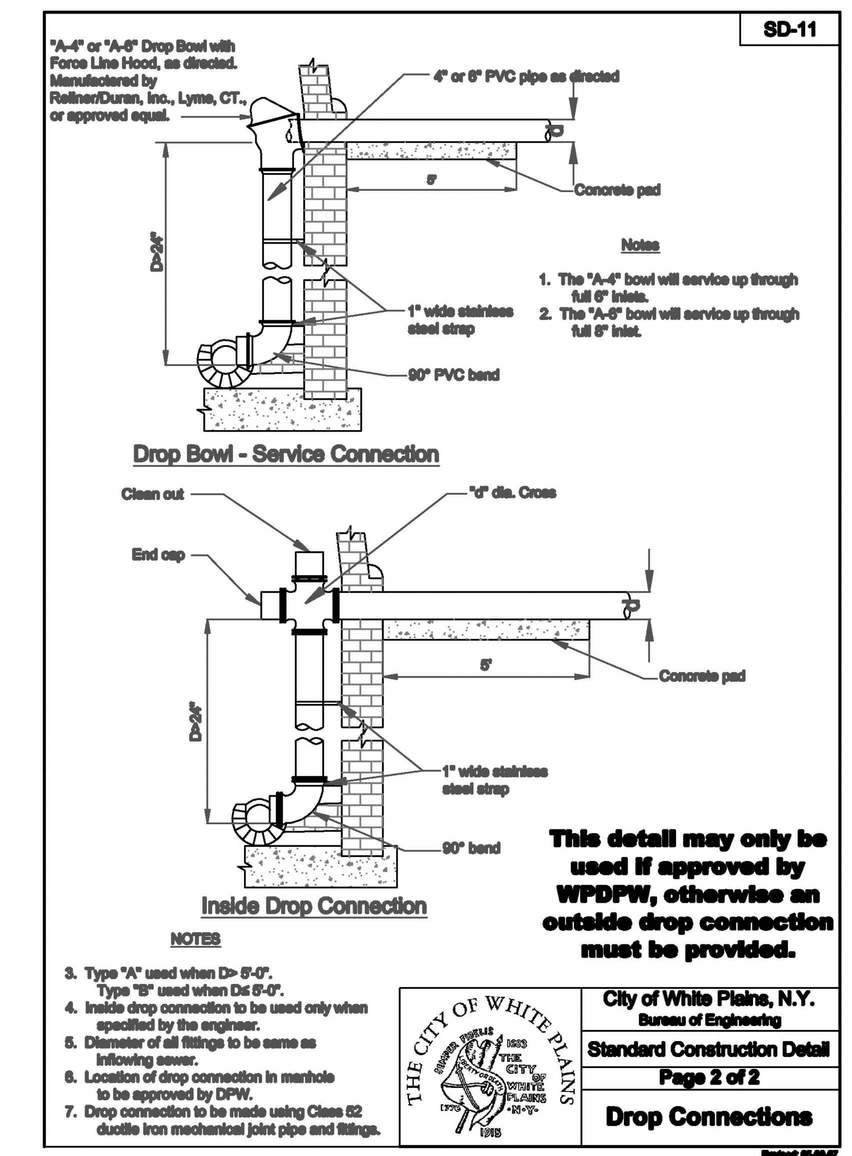

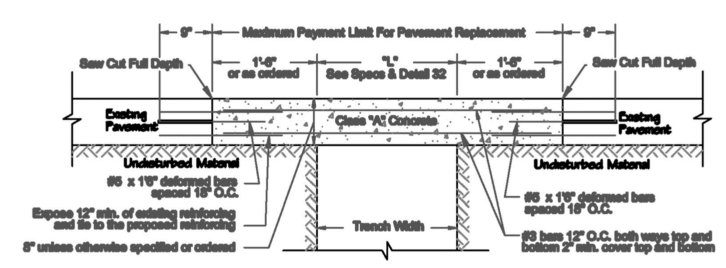

CONCRETE PAVEMENT REPLACEMENT
(Item 56)
SCALE = N.T.S.

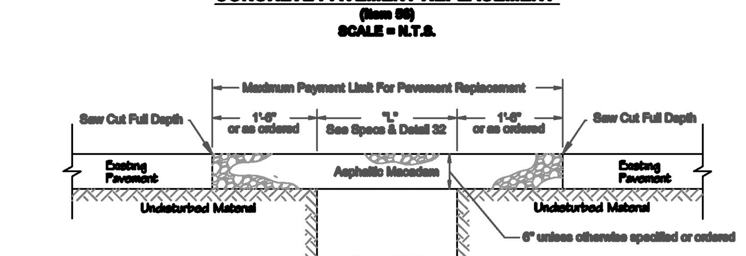

ASPHALTIC MACADAM PAVEMENT REPLACEMENT
(Item 55)
SCALE = N.T.S.

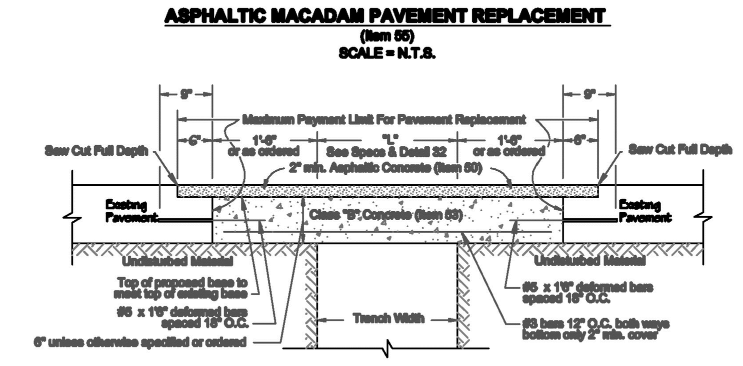

ASPHALTIC CONCRETE ON CONCRETE BASE PAVEMENT REPLACEMENT
(Items 50 & 53)
SCALE = N.T.S.

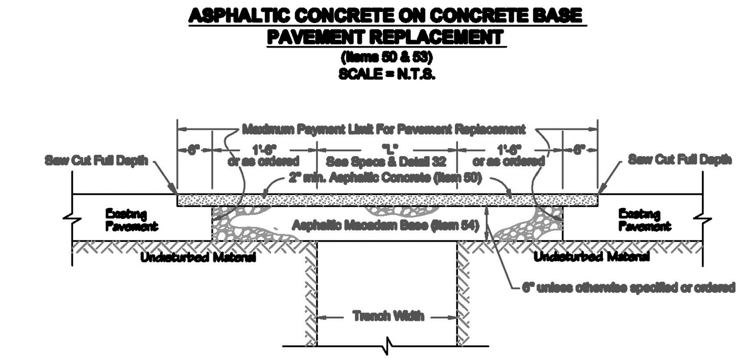

ASPHALTIC CONCRETE ON ASPHALTIC MACADAM BASE PAVEMENT REPLACEMENT
(Items 50 & 54)
SCALE = N.T.S.

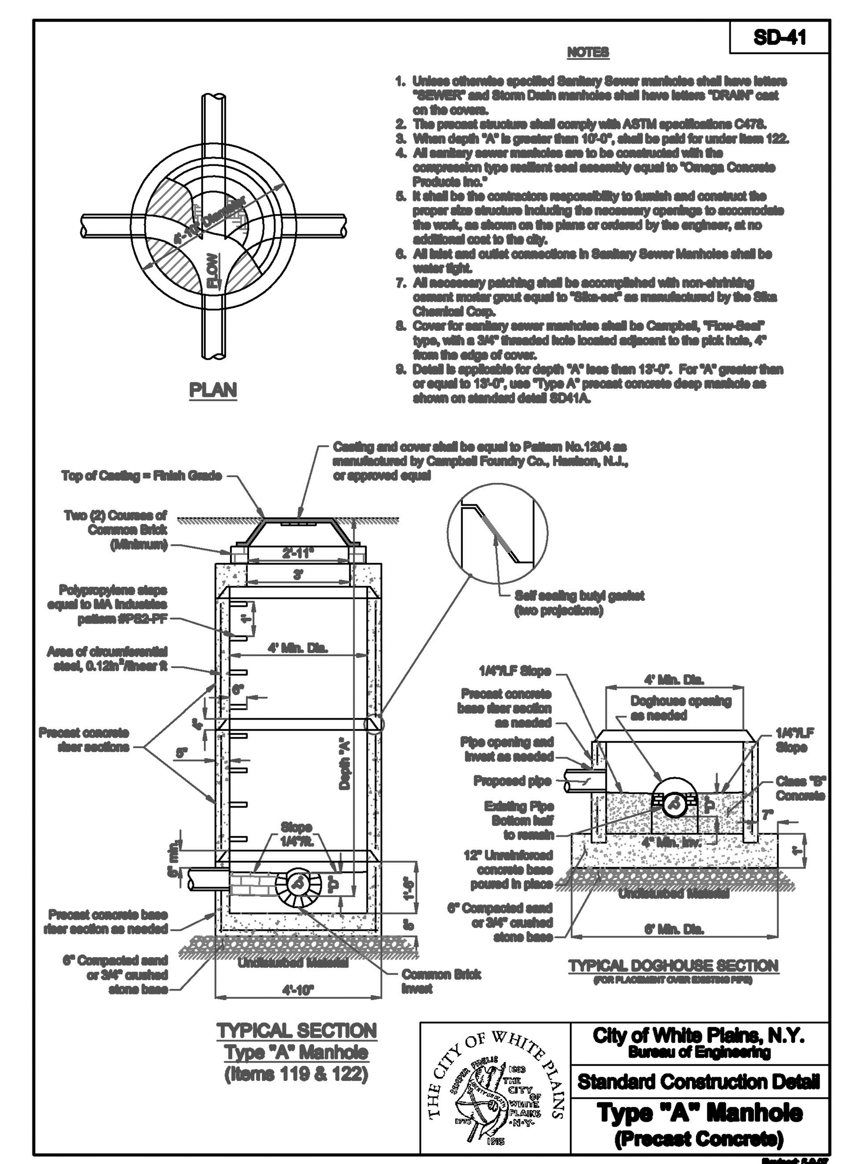

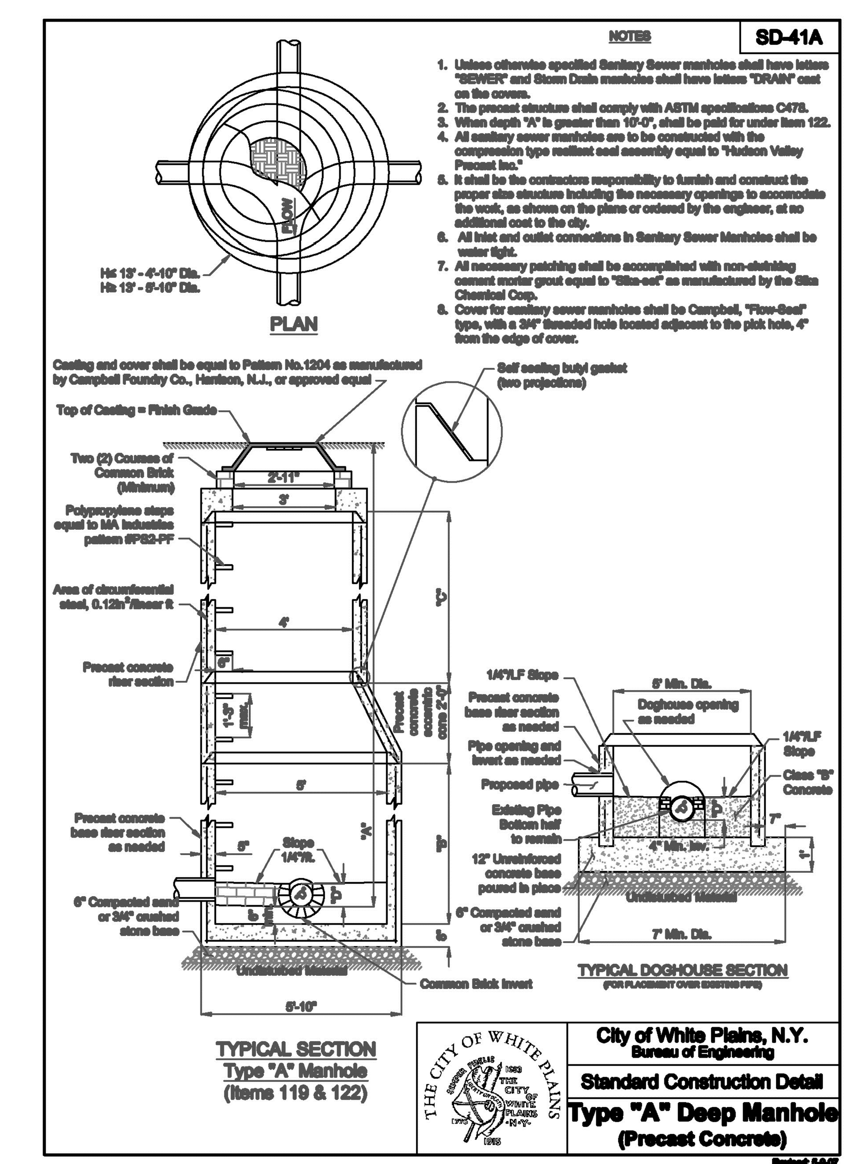

PRESSURE AND LEAKAGE TESTING:

GRAVITY SEWERS
1. ALL TESTS SHALL BE CONDUCTED UNDER THE SUPERVISION OF THE ENGINEER.
2. SEWERS MAY BE TESTED EITHER HYDROSTATIC ALLY USING AN INFILTRATION OR EXFILTRATION TEST OR WITH A LOW PRESSURE TEST.
3. LEAKAGE (EXFILTRATION/INFILTRATION) SHALL NOT EXCEED 100 GALLONS PER MILE OF PIPE PER DAY PER INCH OF NOMINAL PIPE DIAMETER.
4. CALCULATIONS CLEARLY INDICATING COMPLIANCE ARE REQUIRED. LOW-PRESSURE AIR TESTS MUST CONFORM TO NYSDEC PAMPHLET TIP-15 (4/19/89).

FORCE MAINS
1. ALL TESTS SHALL BE CONDUCTED UNDER THE SUPERVISION OF THE ENGINEER.
2. PRESSURE TESTS SHALL BE MADE AFTER COMPLETION OF BACKFILLING OPERATIONS AND AT LEAST 36 HOURS AFTER ANY CONCRETE THRUST BLOCKS HAVE BEEN CAST.
3. THE TEST MUST BE HYDROSTATIC. THE ALLOWABLE LEAKAGE SHALL BE CALCULATED USING AWWA STANDARD C600.
4. TEST PRESSURE SHALL BE AT LEAST 100 PSI OR $1\frac{1}{2}$ TIMES THE MAXIMUM SYSTEM OPERATING PRESSURE, WHICHEVER IS GREATER.
5. THE DURATION OF THE TEST SHALL BE TWO (2) HOURS.

MANHOLES
1. BOTH VACUUM TESTING AND HYDROSTATIC TESTING ARE ACCEPTABLE.
2. IF A MANHOLE FAILS A VACUUM TEST, AFTER REPAIR IT MUST BE TESTED HYDROSTATICALLY. VACUUM TESTING MUST CONFORM TO NYSDEC TIP-15 (4/19/89).

WCDOH NOTIFICATION:
THE WCDOH AND THE CITY OF WHITE PLAINS MUST BE NOTIFIED FORTY EIGHT (48) HOURS PRIOR TO ANY TESTING OF WATER AND/OR SEWER MAIN.

REFERENCES:
ALL TESTING SHALL BE PERFORMED IN ACCORDANCE WITH NYSDEC TECHNICAL INFORMATION PAMPHLET No. 15 DATED APRIL 19, 1989. ASTM C-828 FOR CLAY PIPE, ASTM C-924 FOR CONCRETE PIPE, ASTM F-1417 FOR PLASTIC PIPE.

City of White Plains, N.Y.
Bureau of Engineering
Sanitary Sewer Standard Construction Details

Sanitary Sewer Standard Construction Details

THE CITY OF WHITE PLAINS

Unauthorized Alteration or Addition to this Plan is a Violation of Section 7209(2) of the New York State Education Law. Copies of this Map Not Having the Seal of the Engineer Shall Not Be Valid.

Drawing name: F:\DPW\ENG\DRAWINGS\STANDARDS\DETAILS\Westchester County\WCDOH - SANITARY STANDARDS 8-2013.dwg

COPYRIGHT © 2016 by JMC All Rights Reserved. No part of this document may be reproduced, stored in a retrieval system, or transmitted in any form or by any means, electronic, mechanical, photocopying, recording or otherwise, without the prior written permission of JMC PLANNING, ENGINEERING, LANDSCAPE ARCHITECTURE & LAND SURVEYING, PLLC | JMC SITE DEVELOPMENT CONSULTANTS, LLC | JOHN MEYER CONSULTING, INC. (JMC). Any modifications or alterations to this document without the written permission of JMC shall render them invalid and unusable.

NOT FOR CONSTRUCTION

ANY ALTERATION OF PLANS, SPECIFICATIONS, PLATS AND REPORTS BEARING THE SEAL OF A LICENSED PROFESSIONAL ENGINEER OR LICENSED LAND SURVEYOR IS A VIOLATION OF SECTION 7209 OF THE NEW YORK STATE EDUCATION LAW, EXCEPT AS PROVIDED FOR BY SECTION 7209, SUBSECTION 2.

NO.	REVISION	DATE	BY
1.	SITE PLAN SUBMISSION	05/19/2014	CS
2.	REVISED PER CITY COMMENTS	10/20/2014	CS
3.	REVISED PER CITY COMMENTS	12/10/2014	CS
4.	REVISED PER CITY COMMENTS	03/17/2015	CS
5.	REVISED PER CITY COMMENTS	05/01/2015	CS
6.	REVISED PER CITY COMMENTS	05/15/2015	CS
7.	SITE PLAN SUBMISSION	10/31/2016	CS

Previous Editions Obsolete

APPLICANT/OWNER:
FRENCH-AMERICAN SCHOOL OF NEW YORK
525 FENIMORE ROAD
MAMARONECK, NY 10543

ARCHITECT:
STANTEC
400 MORGAN CENTER
101 EAST DIAMOND STREET
BUTLER, PA 16001-5923

JMC Planning, Engineering, Landscape Architecture & Land Surveying, PLLC
JMC Site Development Consultants, LLC
John Meyer Consulting, Inc.
120 BEDFORD ROAD • ARMONK, NY 10504
voice 914.273.5225 • fax 914.273.2102
www.jmcpllc.com

SANITARY SEWER STANDARD CONSTRUCTION DETAILS
(CITY OF WHITE PLAINS)

FRENCH-AMERICAN SCHOOL OF NEW YORK
336 RIDGEWAY
CITY OF WHITE PLAINS, NEW YORK

DRAWN: CS	APPROVED: RR
SCALE: N.T.S.	
DATE: 09/29/2014	
PROJECT No: 10170	
DWG: 10170-DETAILS	TAB: DET-09 SP / LS: --
DRAWING No: SP-19	

SANITARY SEWER STANDARD CONSTRUCTION DETAILS

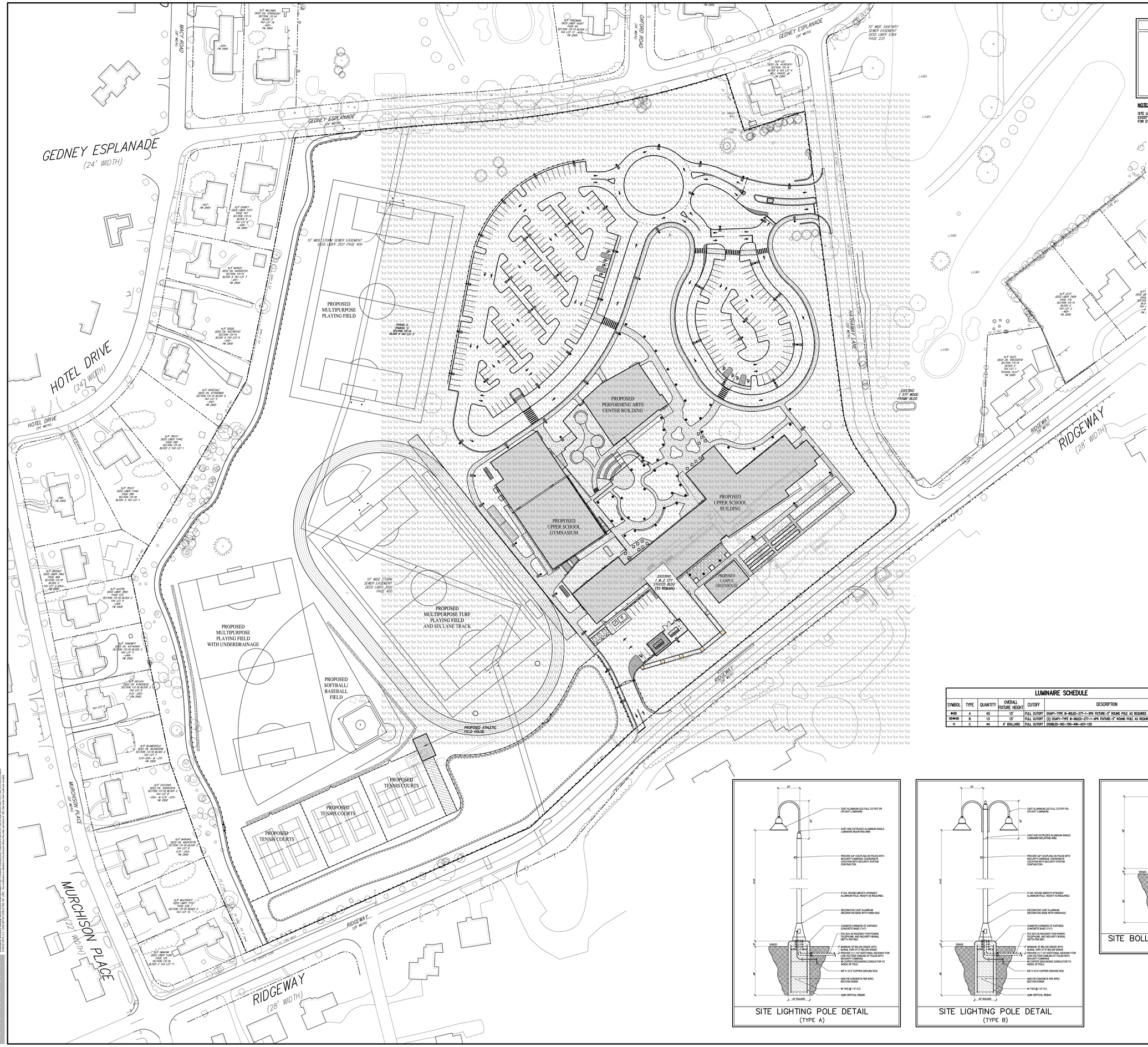

LEGEND

- EXISTING UTILITY POLE
- EXISTING LIGHT POLE
- PROPOSED SINGLE ARM LIGHTING STANDARD
- PROPOSED BOLLARD LIGHTING STANDARD
- PROPOSED SIGN/FLAG POLE LIGHTING STANDARD
- PROPOSED ILLUMINANCE IN FOOT-CANDLES

NOTE:

SITE LIGHTING FIXTURES WILL TURN ON AT DUSK AND WILL TYPICALLY TURN OFF BY 9PM WITH THE EXCEPTION OF SECURITY LIGHTING. AS REQUIRED, LIGHTING HOURS OF OPERATION WILL BE EXTENDED FOR EVENING EVENTS HELD AT THE SCHOOL.

LUMINAIRE SCHEDULE

SYMBOL	TYPE	QUANTITY	OVERALL FIXTURE HEIGHT	CUTOFF	DESCRIPTION
●▭	A	45	15'	FULL CUTOFF	DSAP1-TYPE III-BOLLD-277-1-BPK FIXTURE-5" ROUND POLE AS REQUIRED AND 2500 BASE
▭●▭	B	13	15'	FULL CUTOFF	(2) DSAP1-TYPE III-BOLLD-277-1-BPK FIXTURE-5" ROUND POLE AS REQUIRED AND 2500 BASE
●	C	44	4' BOLLARD	FULL CUTOFF	DSXBLED-16C-700-40K-ASY-120

SITE LIGHTING POLE DETAIL
(TYPE A)

SITE LIGHTING POLE DETAIL
(TYPE B)

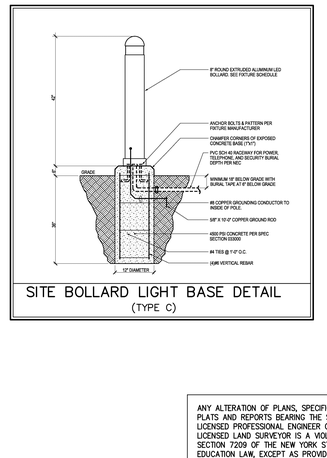

SITE BOLLARD LIGHT BASE DETAIL
(TYPE C)

ANY ALTERATION OF PLANS, SPECIFICATIONS, PLATS AND REPORTS BEARING THE SEAL OF A LICENSED PROFESSIONAL ENGINEER OR LICENSED LAND SURVEYOR IS A VIOLATION OF SECTION 7209 OF THE NEW YORK STATE EDUCATION LAW, EXCEPT AS PROVIDED FOR BY SECTION 7209, SUBSECTION 2.

No.	Revision	Date	By
1.	SITE PLAN SUBMISSION	10/31/2016	CS

Previous Editions Obsolete

APPLICANT/OWNER:
FRENCH-AMERICAN SCHOOL OF NEW YORK
525 FENIMORE ROAD
MAMARONECK, NY 10543

ARCHITECT:
STANTEC
400 MORGAN CENTER
101 EAST DIAMOND STREET
BUTLER, PA 16001-5923

JMC Planning, Engineering, Landscape Architecture & Land Surveying, PLLC
JMC Site Development Consultants, LLC
— John Meyer Consulting, Inc. —
120 BEDFORD ROAD • ARMONK, NY 10504
tel: 914.273.5225 • fax: 914.273.2102
www.jmcpllc.com

SITE LIGHTING PLAN
FRENCH-AMERICAN SCHOOL OF NEW YORK
336 RIDGEWAY
CITY OF WHITE PLAINS, NEW YORK

DRAWN:	CS
APPROVED:	RR
SCALE:	1" = 50'
DATE:	10/31/2016
PROJECT No:	10170
JMC DOCS-LIGHTING-PLAN	DWG AREA-01
SCR:	--
DRAWING No:	SP-20

NOT FOR CONSTRUCTION
COPYRIGHT © 2016 by JMC. All Rights Reserved. No part of this document may be reproduced, stored in a retrieval system, or transmitted in any form or by means, electronic, mechanical, photocopying, recording, or otherwise, without the prior written permission of JMC. This publication or any part thereof is not to be used for any purpose not specifically authorized by JMC. Unauthorized use of this document violates applicable laws, including but not limited to the Federal Copyright Act. Violators may be prosecuted to the fullest extent of the law. Unauthorized use may subject violators to liability for all damages, including but not limited to actual damages, consequential damages, and statutory damages, including but not limited to attorneys' fees. Any unauthorized use, modification, or distribution of this document is strictly prohibited. By accepting this document, you agree to the foregoing restrictions. PROTECTED TO THE FULLEST EXTENT POSSIBLE BY LAW. JMC reserves the right to pursue all remedies available at law or in equity for unauthorized use of this document.